PROJECTS ■ THEORY ■ APPLICATIONS ■ CIRCUITS ■ TECHNOLOGY

NUTS AND VOLTS

www.nutsvolts.com
JUNE 2008

EVERYTHING FOR ELECTRONICS

PRECISION STEREO HEADPHONE AMPLIFIER

For about $30 in parts, for the core amplifier, and a weekend of soldering SMCs, you can enjoy audiophile quality sound.

Learn It:

- Turn A Schematic Into A Finished PCB
- USB Serial Port Breakboard
- Experiments With The PIC32

Build It:

- OvenFlow 1.0
- Test Bench Variac
- Switching Regulator

U.S. $5.50 CANADA $7.00
06>
0 74470 89295 3

Serial-to-Ethernet Converter

Available Now!
New 2008 Lower Pricing

PoE SitePlayer Telnet System
- $99.95
SitePlayer Telnet System
- $79.95
SitePlayer Telnet Modules
- $24.95

SitePlayer™ TELNET

SitePlayer Telnet Module

Sample Browser Screenshot

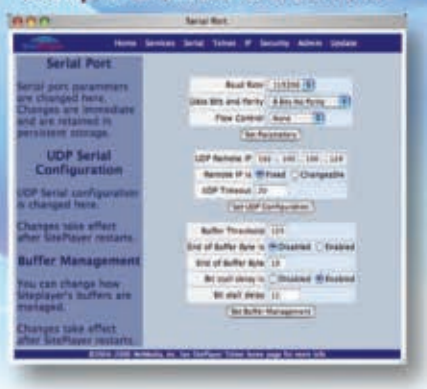

PoE Power Over Ethernet

- Configure and upgrade through web browser
- Access micro-controller or other RS232 serial device over The Internet
- Full RS232 handshaking
- 50 to 11500 baud data rates
- DHCP, Link Local, and static IP Addresses
- TCP/IP and UDP data transfers

siteplayer.com

NetMedia Inc. Tucson AZ 85737 t.520.544.4567 f.520.544.0800 netmedia.com

Monitoring Applications Just Got Easier

Smarter Embedded Design

The RCM4300 RabbitCore® module gives you more processing power and memory for your demanding embedded applications that require web interfaces, graphics or encryption. Data logging applications will also take advantage of the miniSD™ memory cards with up to 1GB of storage. It's easy to add the RCM4300 - or any RabbitCore module – to your pin-compatible design.

Superior Performance and Mass Storage for:

- Web interfaces and graphics
- Data logging
- Security and encryption

RCM4300 RabbitCore®

- **Rabbit® 4000 @ 58.98 MHz**
- **10/100Base-T Ethernet**
- **Up to 1GB of miniSD™**
- **8 channel analog input, 12-bit**

Get Your Development Kit Today for $299

Development kits include everything to start your development, Dynamic C® software, RCM4300 RabbitCore module, 512MB miniSD™ card, development board, programming cables and accessories.

www.rabbitembedded.com

RABBIT™

2900 Spafford Street, Davis, CA 95618 Tel **530.757.8400**

08020

Let your geek shine.

Meet Leah Buechley, developer of LilyPad—a sew-able microcontroller—and fellow geek. Leah used SparkFun products and services while she developed her LilyPad prototype.

The tools are out there, from LEDs to conductive thread, tutorials to affordable PCB fabrication, and of course Leah's LilyPad. Find the resources you need to let your geek shine too.

sparkfun™
ELECTRONICS

»Sharing Ingenuity
SPARKFUN.COM

©2008 SparkFun Electronics, Inc. All rights reserved.

SERIAL TO ETHERNET SOLUTIONS

Simple Ethernet connectivity for serial devices

Works out of the box - no programming is required

Customize to suit any application with low-cost development kit

Features:

10/100 Ethernet

TCP/UDP mode

DHCP/Static IP Support

Data rates up to 921.6kbps

Web-based configuration

Device P/N: SB70-100CR
Kit P/N: NNDK-SB70-KIT

SB70

$69 *Qty. 100*

2-port serial-to-Ethernet server with TTL support

Device P/N: SB72-EX-100CR
Kit P/N: NNDK-SB72EX-KIT

SB72EX

$139 *Qty. 100*

2-port serial-to-Ethernet server with RS-232 & RS-485/422 support

Device P/N: PK70EX-232CR
Kit P/N: NNDK-PK70EX232-KIT

PK70EX232

$269 *Qty. 100*

4-port serial-to-Ethernet server with RS-232 support

Need a custom solution?

NetBurner **Serial to Ethernet Development Kits** are available to customize any aspect of operation including web pages, data filtering, or custom network applications. All kits include platform hardware, ANSI C/C++ compiler, TCP/IP stack, web server, e-mail protocols, RTOS, flash file system, Eclipse IDE, debugger, cables and power supply.

NetBurner
Networking in One Day!

Information and Sales | sales@netburner.com
Web | www.netburner.com
Telephone | 1-800-695-6828

freescale™
Alliance Member

NUTS AND VOLTS

JUNE 2008

www.nutsvolts.com

Projects

36 A DELUXE TEST BENCH VARIAC

Variable AC voltage, LED readouts, and a giant adjustment knob to make your other test equipment jealous.

■ *By Robert Reed*

●●●○ Advanced Level

42 BUILD A SWITCHING REGULATOR

Time to ditch that old three-terminal linear regulator and move up to the 1980s with this efficient buck converter. Plus you'll learn a thing or two about PWM, inductors, and all the other stuff you've been avoiding.

■ *By Jim Stewart*

●●●○ Advanced Level

48 PRECISION STEREO HEADPHONE AMPLIFIER

For about $30 in parts for the core amplifier and a weekend of soldering, you can enjoy premium audiophile sound through your MP3 player or iPod.

■ *By Bryan Bergeron*

●●○○ Intermediate Level

Page 36

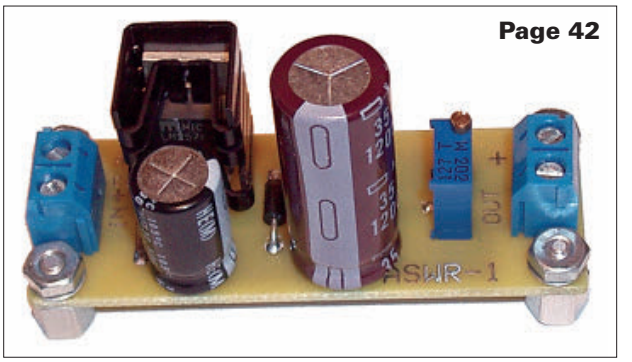

Page 42

Be sure to check the Nuts & Volts website for downloads that go along with these projects.

Departments

08	DEVELOPING PERSPECTIVES	64	ELECTRO-NET
10	READER FEEDBACK	102	NV WEBSTORE
32	NEW PRODUCTS	106	CLASSIFIEDS
34	SHOWCASE	110	TECH FORUM
		113	AD INDEX

"HOW TO" BASICS

Watch for articles with this banner that will cover the basics of electronics for newbies and be good refreshers for seasoned DIYers.

Nuts & Volts (ISSN 1528-9885/CDN Pub Agree #40702530) is published monthly for $24.95 per year by T & L Publications, Inc., 430 Princeland Court, Corona, CA 92879. PERIODICALS POSTAGE PAID AT CORONA, CA AND AT ADDITIONAL MAILING OFFICES. POSTMASTER: Send address changes to **Nuts & Volts, P.O. Box 15277, North Hollywood, CA 91615** or Station A, P.O. Box 54, Windsor ON N9A 6J5; cpcreturns@nutsvolts.com.

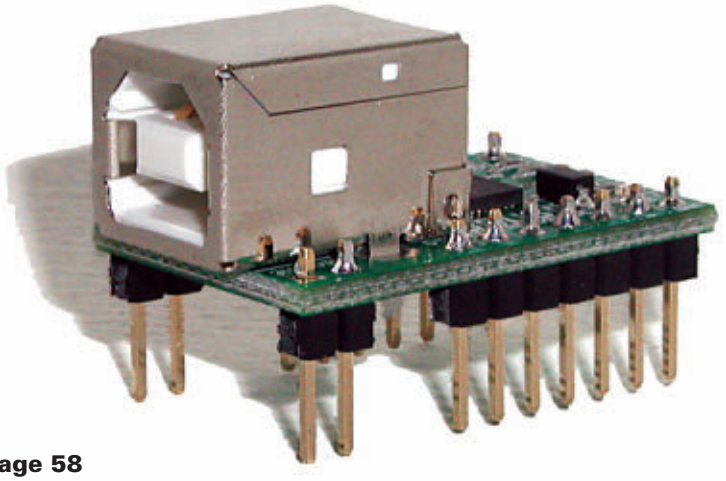

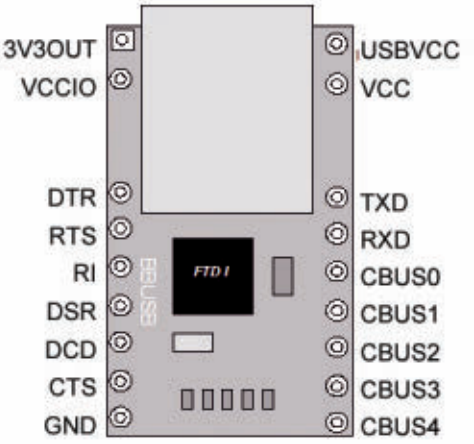

Page 58

Features

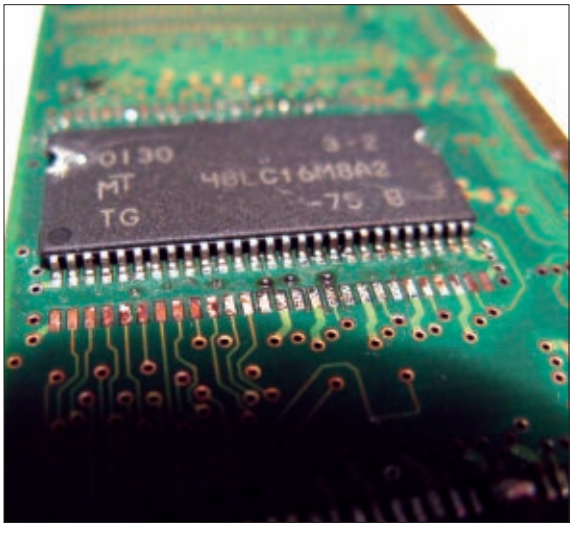

Page 67

58 THE SERIAL PORT IS DEAD! LONG LIVE THE SERIAL PORT!
Taming The Universal Serial Bus.
Sure, USB sounds like a great idea if you're a PC motherboard designer or a nuclear brain surgeon. But the rest of us just miss the simplicity of serial over a DB-25. Regain your mastery of serial comms with this cool little experiment.
■ *By Joe Pardue*

67 OVENFLOW 1.0
Discover a program to control SMD (surface-mount device) soldering using a toaster oven.
■ *By Kit Ryan*

74 PCB BASICS: FROM YOUR BRAIN TO A FINISHED BOARD
"How To" Basics
Learn how easy the process really is to turn your schematic into a finished printed circuit board.
■ *By Fred Eady*

Columns

12 TECHKNOWLEDGEY 2008
Events, Advances, and News
Topics covered include robotic bat planes, the ultimate keyboard, a lower-priced nav system, just to name a few.

16 THE DESIGN CYCLE
Advanced Techniques for Design Engineers
Firmware you can touch.

26 Q&A
Reader Questions Answered Here
Sump pump circuit, regenerative radio, DC to DC regulator, more.

82 PICAXE PRIMER
Sharpening Your Tools of Creativity
Good intentions and "faux" PC boards.

88 OPEN COMMUNICATION
The Latest in Networking and Wireless Technologies
The 700 MHz spectrum.

92 PERSONAL ROBOTICS
Understanding, Designing & Constructing Robots
Habitat for Hobbies — Part 1.

by Bryan Bergeron, Editor

DEVELOPING PERSPECTIVES

Finding Your Tone

Most of the projects described in *Nuts & Volts* can be built with readily-available, relatively inexpensive components from the likes of Digi-Key (**www.digikey.com**), Jameco Electronics (**www.jameco.com**), and All Electronics (**www.allelectronics.com**). Furthermore, in the rare cases in which the project author doesn't supply the printed circuit board (PCB) layout, it's typically a simple matter to use one of the free or inexpensive PCB CAD applications. Thanks to extensive libraries of the latest chip and surface-mount components, a layout is seldom more than a few dozen mouse clicks away. However, when it comes to tube-based projects, it's a different matter.

I'll illustrate with one of my recent design projects, a tube-based guitar amplifier. The project started simply enough. The basic amplifier design borrowed from schematics of Fender and Marshall amplifiers posted to the web, supplemented with a few tips from my dog-eared copy of the 1978 *ARRL Handbook*. So far, so good. When it came to assembling the parts, however, I discovered that my junk box was of little help. I had no tubes, high-voltage toroidal transformers, high voltage bypass and coupling capacitors, or relatively high-wattage precision leaded resistors. Furthermore, I had to search through the online databases of three vendors before locating the parts I needed to complete the project.

DIY tube preamp with solid-state power supply from AnalogMetric.

Before ordering the parts, I went to my favorite board layout program, ExpressSCH and ExpressPCB. Unfortunately, I discovered that the program doesn't ship with schematic icons or layout templates for tubes and other high-voltage components. Fortunately, I found several libraries of tubes and associated components in the download area of the ExpressPCB group on Yahoo!. However, because of the greater trace spacing and larger components associated with the tube circuitry, the size of a PCB grew quickly — as did the cost.

In the end, I decided to forgo the expensive custom amplifier project and take a chance on one of many DIY tube amp houses that advertise on eBay. I went with AnalogMetric (**www.analogmetric.com**), a Hong-Kong company that offers dozens of tube-type DIY kits, from unpopulated PCBs and full kits to professional looking aluminum enclosures. I studied the schematic and photos on the AnalogMetric website and decided I'd rather spend my time modifying a clean, relatively simple amplifier rather than hunting for hard-to-find parts and paying more for shipping than components.

The DIY preamp, which consisted of a PCB and all the components except the power transformer, was $168, not including shipping from Hong Kong. The preamp sports three 12AX7s and solid-state power supply. Add one HV power transformer — also available from AnalogMetric — and you have a complete tube preamp that can feed a power amp. In all, I was pleased with the kit. The PCB was well designed, clean, and the parts fit easily. Inexperienced builders might be upset by a lack of instructions, though. I had to rely on a parts list keyed to a schematic because there was no step-by-step instruction manual. My only complaint with the kit was that the company shipped the incorrect power transformer, but readily replaced it with the appropriate model after an email. The components seemed first rate — except for the high voltage output capacitor, which I replaced with a capacitor with a higher capacitance and much higher ripple current rating. Although $168 may seem expensive for a preamp kit, the cost of parts and shipping from the three vendors for the original design would have cost more, and I would have spent a weekend designing a circuit board.

Working with the DIY tube amplifier was like taking a trip back in time. Although I grew up with tubes, I forgot many of the advantages of solid-state devices. Small, lightweight components and no danger of accidental electrocution. Working almost exclusively with SMT components over the past several years, I also forgot how much heat is required to solder a half watt resistor or tube socket to a thick, heavily plated PCB. Forget the temperature-controlled, needle-tipped soldering iron or hot air pencils — this is a job for a broad, chisel-tipped, 35 watt iron. And, except for the switching transistors, there's no need to worry about static charge. Tubes are relatively indestructible in that respect.

The real pleasure in working with a tube preamp is the sound. Not the sound that comes from a carefully tuned amplifier with perfect input levels and no measurable output distortion — for that, you'd be better off with a solid-state amp. Where a tube amplifier comes to life is when the signal from a guitar or other instrument

is heavily distorted – approaching 30% total harmonic distortion or more. Whereas solid-state amps sound harsh when driven to this level of distortion, tube amps have a 'warm' sound that's impossible to exactly replicate with modern electronics. I have a couple solid-state modeling amps that come close to the tube sound, but in a side-by-side experiment, there's no question that the tube amp provides the best sound. If you're into bass or guitar and searching for your tone, you'll more likely find it in a tube amp than in a more technologically sophisticated (and typically cheaper) solid-state amp. If you want to experience tubes without the hassle of scrounging for parts or dealing with a Hong Kong merchant, try PAiA Electronics, Angela Instruments, and Audio Note for kits and supplies. Good luck finding your tone. **NV**

RESOURCES

ARRL Handbook, Pre-1980.

AnalogMetric, Hong Kong, **www.analogmetric.com**.

PAiA Electronics, Inc., Edmon, OK, **www.Paia.com**.
Tube preamp kits, with a focus on music applications.

Angela Instruments, Annapolis Junction, MD, **www.angela.com**.
Tubes, sockets, capacitors, resistors.

Audio Note, **www.audionotekits.com**.
Audiophile-level preamp and amplifier kits.

Arctic Silver, **www.arcticsilver.com**.
Thermal epoxies and compounds.

LED Supply, **www.ledsupply.com**.
High-power LEDs and constant current drivers.

TechInsights teams with Microchip Technology and Digi-Key to launch the Microchip PIC32 Design Challenge

Innovative, social-networking community for engineers offers total prize value of more than $100,000.

TechInsights has announced the launch of the Microchip PIC32 Design Challenge, a year-long contest and community sponsored by Microchip Technology, Inc., and Digi-Key Corporation. The Design Challenge can be found at **www.myPIC32.com**.

The objective of this four-phase Challenge is to foster a social community where designers can build, test, and display their designs to their colleagues through the use of blogs, videos, and forums. This interactive community is made of up of members and contestants. Registered members of the community will have the ability to rate each contestant's design, according to the design value criteria. Contestants of the Design Challenge will rely on Microchip's PIC32 Starter Kit, an easy-to-use, all-in-one, PIC32-based module ($49 value). A set of three industry expert judges, as well as member peers, will vote each week to see who "survives" and wins prizes that help contestants continue their contest journey.

Each week, members will be eligible for prizes based on their participation and activity within the community. The winning contestant will receive a home theater system valued at $8,000, although the total value of prizes for members and contestants throughout the contest exceeds $100,000.

For contest rules and eligibility requirements, visit **www.myPIC32.com**.

NUTS AND VOLTS
EVERYTHING FOR ELECTRONICS

READERS IN FAVOR OF 'FOOL'ISH CONTENT

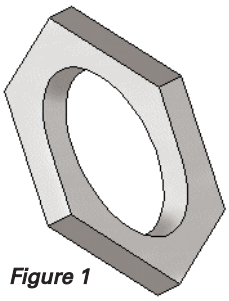

Figure 1

It was with great pleasure and a certain amount of nostalgia that I read Vern Graner's Personal Robotics column on the new Digiencabulator in the April issue of *Nuts & Volts*.

I was privileged to be present at a demonstration given a good number of years ago by Rockwell Automation of their version — the Retroencabulator. When I first heard the description of the device, my mind reeled because of the tremendous amount of technology that they were able to integrate using Dodge gears and bearings, Reliance Electric motors, Allen-Bradley controls, and monitored by Rockwell Software.

The fact that the newest version is far more cost-effective just shows how far the industry has progressed.

Also, the mounting bracket you devised is truly innovative. Though it is simple in concept, it would take a very good machinist to construct it.

However, the hex nuts you use to secure the Digiencabulator to the bracket are of the incorrect type. Standard hex nuts won't work properly in this application. What is needed is the design sometimes attributed to Escher. (See Figure 1). If you are unable to procure the Escher hex nuts (Home Depot rarely carries them), then the famed Rick should have no problem machining them, as well.

Other than that minor correction, it was a fabulous article!

David J. Pickett
Lakeland, FL

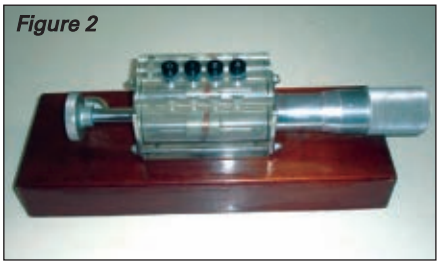

Figure 2

I enjoyed Vern Graner's column on the Digiencabulator. I have been using the earlier Retroencabulator device to study the Hillnor response (i.e., mass body movement) of mating male Roosevelt Elk of the Olympic National Forest (ONF) for several years.

DRO FOR YOUR LATHES AND MILLS

$599 US
X - Y
BT-2 System
Includes
BT-2 Display
1 - 48" Scale
1 - 16" Scale
Power Supply
Manual

$749 US
X - Y - Z
BT-3 System
Includes
BT-3 Display
1 - 48" Scale
2 - 16" Scale
Power Supply
Manual

5 Year Warranty

Bolt Circles • Bolt Lines • Power Fail Memory • Tool Offsets
Reversible Count Direction • INC/ABS Mode • Inch/MM
Diameter Mode • Centering

CALL TOLL FREE
1-800-772-6322
www.star-techno.com

Made in Canada BUY FACTORY DIRECT

Published Monthly By
T & L Publications, Inc.
430 Princeland Ct.
Corona, CA 92879-1300
(951) 371-8497
FAX **(951) 371-3052**
Webstore orders only **1-800-783-4624**
www.nutsvolts.com

Subscriptions
Toll Free **1-877-525-2539**
Outside US **1-818-487-4545**
P.O. Box 15277
North Hollywood, CA 91615

FOUNDER/ASSOCIATE PUBLISHER
Jack Lemieux

PUBLISHER
Larry Lemieux
publisher@nutsvolts.com

ASSOCIATE PUBLISHER/ VP OF SALES/MARKETING
Robin Lemieux
display@nutsvolts.com

EDITOR
Bryan Bergeron
techedit-nutsvolts@yahoo.com

CONTRIBUTING EDITORS
Jeff Eckert
Vern Graner
Marvin Mallon
Lou Frenzel
Joe Pardue
Robert Reed
Russ Kincaid
Fred Eady
Ron Hackett
Kit Ryan
Jim Stewart

CIRCULATION DIRECTOR
Tracy Kerley
subscribe@nutsvolts.com

SHOW COORDINATOR
Audrey Lemieux

MARKETING COORDINATOR WEBSTORE
Brian Kirkpatrick
sales@nutsvolts.com

WEB CONTENT
Michael Kaudze
website@nutsvolts.com

PRODUCTION/GRAPHICS
Shannon Lemieux
Joe Keungmanivong

ADMINISTRATIVE ASSISTANT
Debbie Stauffacher

Copyright © 2008 by T & L Publications, Inc.
All Rights Reserved
All advertising is subject to publisher's approval. We are not responsible for mistakes, misprints, or typographical errors. *Nuts & Volts Magazine* assumes no responsibility for the availability or condition of advertised items or for the honesty of the advertiser. The publisher makes no claims for the legality of any item advertised in *Nuts & Volts*. This is the sole responsibility of the advertiser. Advertisers and their agencies agree to indemnify and protect the publisher from any and all claims, action, or expense arising from advertising placed in *Nuts & Volts*. Please send all editorial correspondence, UPS, overnight mail, and artwork to: **430 Princeland Court, Corona, CA 92879**.

I notice you did not discuss the calibration of these two devices nor the legacy Turboencabulator. I have been using the WTA Mark II cabulator calibrator for my ONF studies for several years (Figure 2). The Mark II version provides a gas volume range of 0-100 Hoh-Dogs and the micrometer type device allows for a resolution of 0.001 Hoh-Dog. The calibration device does not provide correction for the Con-Laur aurora australis effect, so should it ever be used in the southern hemisphere, it will be necessary that it (and, of course, the plane of the dinglearm) be aligned parallel to the prime meridian. I expect that this would not be a problem for even the most inexperienced trainee.

Please keep up the fine reporting.

Alan Hosler
Richland, WA

Figure 3

I read with much interest Vern Graner's column on the Turboencabulator in *Nuts & Volts* (Vol. 29 #4).

Your article said that it had been about 1962 when it was invented. I think that it was a little earlier, perhaps mid-50s. Probably GE had to keep it under wraps because it was top-secret.

When I was in Kingsville, TX (1953-1957), I worked overhauling Pratt and Whitney jet engines. The J42-P-6 and later the J48-P-6 used the Turboencabulator. At that time, *it* was top-secret. They wouldn't even tell us what it did, but the engine sure worked better with it on. It would even turn up to 102%. When it went bad, the pilot had a hard time taking off. I heard one time that it cost $2,000. I sure hope the price has come down. Here's a scan (Figure 3) of the J42-P-6 showing the Turboencabulator. It's a little hard to see, but it is there right between the carburetor and the fuel pump on the front of the engine. I hope I don't get into trouble using this scan as the Navy doesn't like people using top-secret information. Of course, after 50 years, it may not be top-secret anymore.

As for the DHMO, my mother-in-

continued on page 108

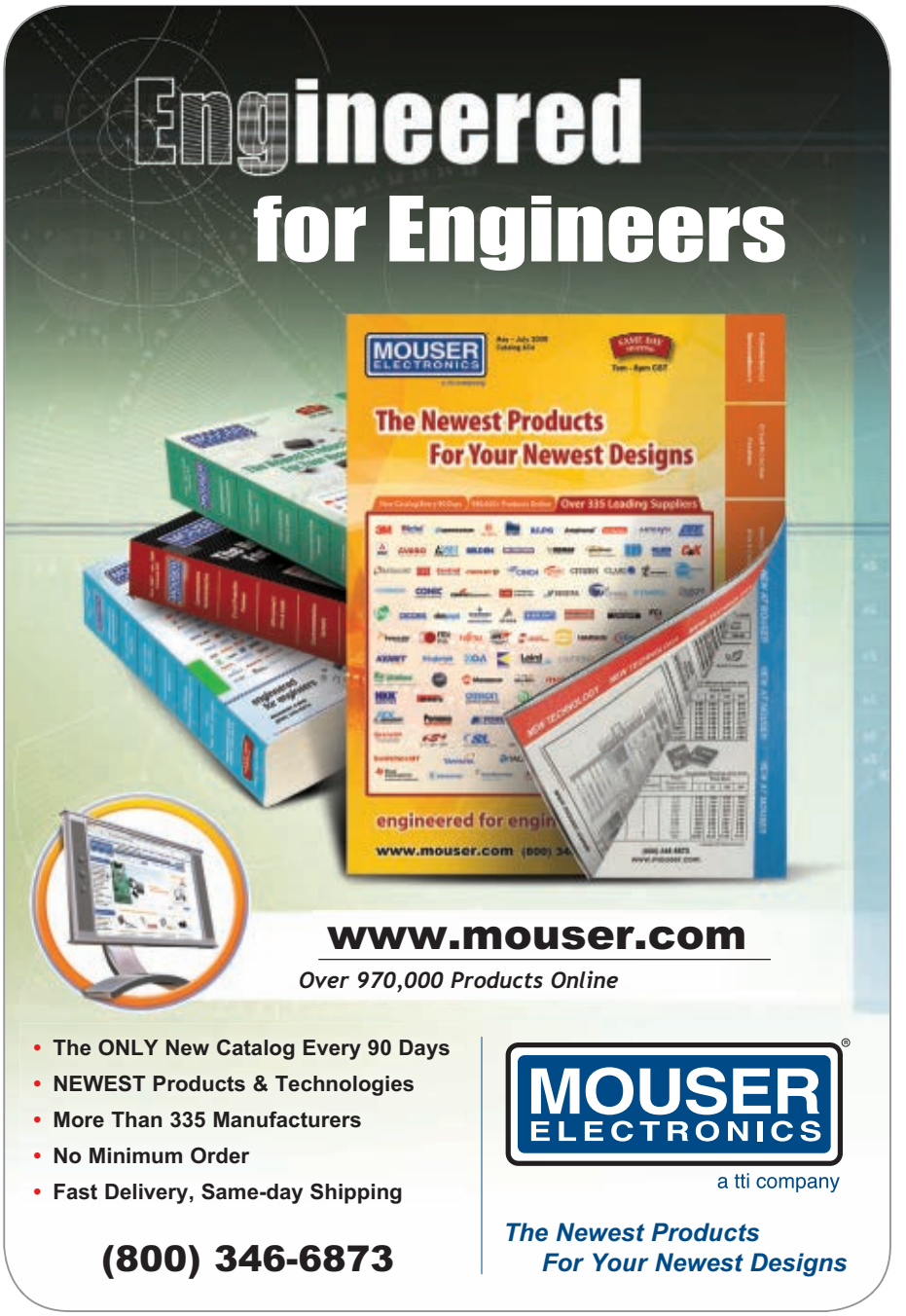

Mouser and Mouser Electronics are registered trademarks of Mouser Electronics, Inc. Other products, logos, and company names mentioned herein, may be trademarks of their respective owners.

TECH KNOWLEDGEY 2008

EVENTS, ADVANCES, AND NEWS

■ BY JEFF ECKERT

ADVANCED TECHNOLOGY

NEW FUNDAMENTAL STATE OF MATTER

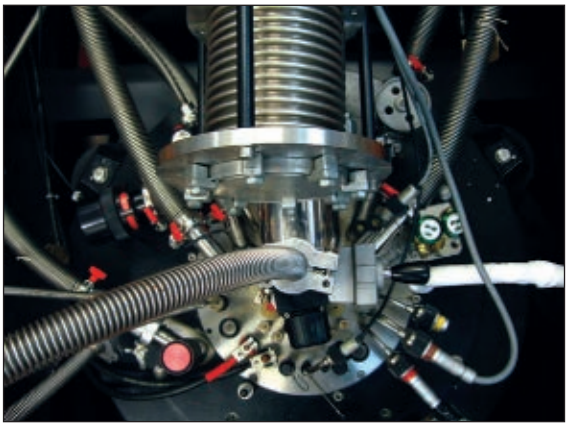

■ A new state of matter was created at Argonne National Lab using this dilution refrigerator, which lowers temperatures to just above absolute zero.

Someone once said, "I am matter. You are matter. The universe is matter. But it doesn't matter." I think it was Einstein after a weekend binge with Löwenbräu and Marilyn Monroe. But you can't have matter without antimatter, yin without yang, or Laurel without Hardy. It is therefore predictable that you can't have superconduction without superinsulation. It just took scientists at the Department of Energy's Argonne National Lab (**www.anl.gov**) to prove it. With the assistance of team members from Germany, Russia, and Belgium, they recently created a thin film of titanium nitride, chilled it to near absolute zero, and then discovered that, beyond a certain threshold, its resistance increased by 100,000 times.

"Titanium nitride films, as well as films prepared from some other materials, can be either superconductors or insulators, depending on the thickness of the film," noted senior scientist Valerii Vinokur. "If you take the film which is just on the insulating side of the transition and decrease the temperature or magnetic field, then the film all of a sudden becomes a superinsulator."

Apparently, superconduction depends on electrons joining together in twosomes called "Cooper pairs" (after Leon Cooper, who won a 1972 Nobel prize for his work in discovering them). When the pairs form long chains, you get an unrestricted flow of electrons. But when they avoid each other, they form self-locking roadblocks to the flow and thus create a huge resistance to current.

Practical applications have yet to be explored, but it was speculated that wrapping such superinsulators around a superconducting material could create an electrical pathway that loses almost no energy in the form of heat, thus allowing highly efficient electrical circuits, sensors, and battery shields.

ROBOTIC SPY PLANE TO MIMIC BATS

The US Army recently announced a five-year, $10 million extendible funding program for the Center for Objective Microelectronics and Biomimetic Advanced Technology (COM-BAT) at the University of Michigan (**www.umich.edu**). Under the auspices of the College of Engineering, the Center intends to help develop a six-inch robotic spy plane, modeled after a bat, that can gather data from sights, sounds, and smells in urban combat zones and transmit information back to soldiers in real time. The U-M researchers will focus on the UAV's microelectronic systems, including sensors, communication tools, and batteries. The plan is to fit it with tiny cameras for stereo vision, a mini-microphone array that can home in on sounds from different directions, and detectors for nuclear radiation and poisonous gases. Night operations will be enabled by low-power miniaturized radar and a sensitive navigation system, and the batbot will be able to scavenge energy from solar, wind, vibration, and other sources, recharging its lithium battery. COM-BAT also involves the University of California at Berkeley and the University of New Mexico, with each developing a different subsystem.

PHOTO COURTESY OF ERIC MASLOWSKI, UNIVERSITY OF MICHIGAN 3D LAB.

■ This six-inch robotic spy plane will gather data and relay it to soldiers in real time.

COMPUTERS AND NETWORKING

RUGGEDIZED TABLET PC

It isn't your standard general-purpose PC, but if you work in such industries as public safety, telecom, utilities, government, and insurance, the Duo-Touch II tablet PC from General

PHOTO COURTESY OF GENERAL DYNAMICS ITRONIX.

■The Duo-Touch II, a second generation tablet PC.

Dynamics Itronix (**www.gd-itronix.com**) may be just what you need. Said to be the industry's lightest unit, it is designed for simple one-handed operation in some of the most challenging environments. Processing power is provided by a 1.5 GHz Intel Core Duo Processor U2500 with 2 MB of L2 cache memory and up to 2,048 MB of DDR2 RAM. One of its strong features is the DynaVue outdoor-viewable display, which is billed as the only one that meets MIL-HDBK-87213 Rev. A, which covers cockpit displays in direct sunlight. You also get support for EDGE/GPRS/UMTS/HSDPA/ HSUPA, EV-DO, 802.11 a/g/n, Bluetooth, and GPS networks, and it can handle up to three RF modems and GPS simultaneously. The PC's name comes from its ability to work in either active digitizer or passive touchscreen modes. The former allows accurate signature capture and adding notes to drawings or maps, whereas the latter is used for navigation in Windows or custom applications. The Duo-Touch can be mounted on a desk or vehicle via a docking station, and an optional keyboard is available for applications that need one. Best of all, the die-cast magnesium enclosure has been crash tested for in-vehicle safety, is sealed against water and dust intrusion, and meets or exceeds MIL-STD 810F durability standards. The list price of $3,595 includes a three-year warranty.

THE ULTIMATE KEYBOARD?

The Art. Lebedev Studio is a pretty interesting operation, being a Moscow-based industrial, graphic, web, and interface design house that employs more than 200. And if you like attitude, you can get it there. On the website, lead designer Artemy Lebedev glowers from behind a pirate-like eye patch and says, "We live the way we like. We work the way we believe is right. We don't give a sh*t about corporate values all together. All the award plaques end up hanging in our lavatory. We abhor buzzword combinations [e.g.,] `creative solution' and `business process optimization.' The offers we send to our clients rarely exceed one page. The only principle we follow is just two words: No bullsh*t." (No wonder Lenin is rotting away in his tomb.)

Among the Lebedev creations is the Optimus Maximus keyboard, which is also pretty interesting. Each key can be programmed to perform specific functions, which is not really so revolutionary, at least by Red Army standards. The keys are stationary, which also is not unique. But each one contains a 48 x 48 pixel color organic light-emitting diode (OLED) array that can present characters in English, Russian, French, German, or Spanish. In addition, any key can be set to match its programmed function. For example, in Photoshop format, the keys match toolbox icons. The same principle applies to PC games and other applications. The keyboard works with both Windows and Mac OS. The biggest catch is that it will run you from $462 to $1,564, depending on the configuration. But the demo is free, so visit **www.artlebedev.com/everything/optimus/demo** to make sure you can't live without one.

■The Optimus Maximus keyboard offers multiple "layouts" for various applications.

PHOTO COURTESY OF ART. LEBEDEV STUDIO.

HP INTRODUCES MINI

■The new HP 2133, designed primarily for classroom use.

PHOTO COURTESY OF HEWLETT-PACKARD.

Joining the flock of PC makers competing in the low-end educational market, Hewlett-Packard (**www.hp.com**) has introduced the HP 2133 Mini-Note, with a base price tag that squeaks in under the $500 mark. It weighs in at 2.6 lb (1.2 kg) and measures about 1 x 10 x 6.5 (H x W x D), but still has a full qwerty keyboard. The display is an 8.9 in (21.6 cm) WXGA (1280 x 768), and it comes with high-def audio, stereo speakers and mikes, and standard Broadcom 802.1a/b/g, and optional Bluetooth 2.0. You also get Windows Vista Business and a choice of internal storage devices starting with a 120/160 GB drive. Power comes from

either a six-cell (55 Whr) or three-cell (28 Whr) battery. Deep within the brushed aluminum enclosure is a Via C7-M processor (up to 1.6 MHz), which has been described as "pokey" but is responsible for the PC's good thermal and power drain qualities. HP has also set up the "Teacher Experience Exchange" (**www.hp.com/go/teacherexperience**) in support of the unit. There, educators can access tutorials for tech teaching, discuss various issues with other teachers, and (of course) sign up to receive promotional materials.

CIRCUITS AND DEVICES

LOWER-PRICED NAV SYSTEM

Even with prices dropping, you can still pay well over $2,000 for an automobile navigation system. But unfortunately, your rusted-out 1988 Chevy Celebrity now has a Blue Book value of only about $500. Something seems out of whack. But even if you refuse to spend more than the car's value on a system, you have options. Earlier this year, Sony announced that its new nav-u™ personal navigation devices (models NV-U73T and NV-U83T) had hit the retail stores with price tags of about $300 and $400, respectively. The latter features Bluetooth technology for making hands-free phone calls.

■ The NV-U83T navigation system.

PHOTO COURTESY OF SONY ELECTRONICS.

The 83T has a 4.8 in (12 cm) dia. display with anti-glare coating and a dual-view feature that zooms in to show important landmarks. (The 73T has only a 4.3 in one.) On the highway, you get a 3D rendition of approaching intersections with a lane guide for facilitating turns. Also included is the POSITION Plus™ feature, which includes pressure, gyro, and acceleration sensors to calibrate the user's location, thus providing continuous information even when traveling through tunnels or between tall buildings. Other features include the "gesture" command (lets the driver jump to commands with a single touch of the screen), a "home" command (just draw an inverted V on the display to find your way home), and text-to-speech capability that provides voice prompts. More than five million points of interest come with nav-u, and it displays brand icons for restaurants, hotels, gas stations, and stores. The system mounts on the windshield or dashboard, gripping with a non-adhesive gel that works even in extreme temperatures. More details are available at **www.sony.com**.

TOP-ACTUATED TACTILE SWITCH

■ C&K's KMT switches offer small footprint, extended life.

PHOTO COURTESY OF C&K COMPONENTS.

If design things require a very small tactile switch (e.g., hearing aids, mobile phones, and MP3 gadgetry), C&K's new KMT series of momentary action devices may be of interest. What you get is an ultra-miniature, low-profile, top-actuated device that is said to offer the industry's smallest footprint (2.6 x 3.0 x 0.65 mm, with a 0.45 mm body height, 0.20 mm actuator height, and 0.13 mm travel). The integrated actuator simplifies the design and yields a 30% minimum tactile ratio, and the switch is rated for a life cycle of 150K operations. A grounding pin is optional. Maximum power is 0.5 VA, maximum voltage 32 VDC, maximum current 50 mA, and operating temperature is -40°C to 85°C. The KMT components come in reels of 4,000 pieces for surface-mounting, but you probably won't be wanting to hand-solder the little gull-wing terminals anyway. Details are available at **www.ck-components.com**. **NV**

INDUSTRY AND THE PROFESSION

25TH ANNIVERSARY

It hardly seems like 25 years have passed, but it was June 1983 when Apple released Lisa, the first commercial computer to employ a graphical user interface (GUI). It featured a Motorola 68000 processor running at a breath-taking 5 MHz, 1 MB of RAM, and two 5.25 in floppy drives. You could also add a 5 MB external drive. The sad part of the story is that, even though Apple spent four years and $50 million developing it, Lisa was pretty much a dismal failure, with sales of only 100,000 units in two years. This is attributable to a combination of clunky operation and a $9,995 price tag. The silver lining is that from it descended the Macintosh, which sold 70,000 units in its first three months and 2.3 million in the first quarter of this year.

PHOTO COURTESY OF APPLE.

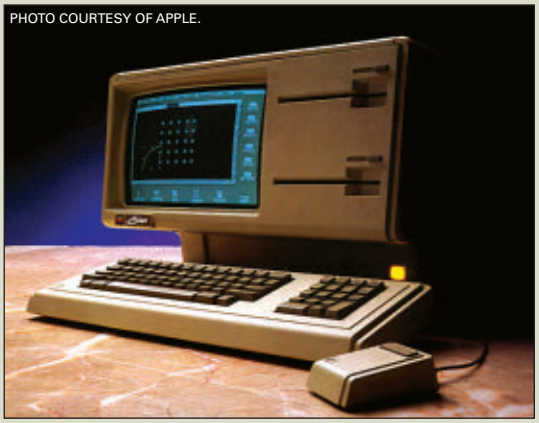

■ Promotional photo of the Apple Lisa.

Windows CE based Touch Controller

CUWIN3500

CUWIN3500

$599 / Qty.1

The Comfile CUWIN3500 is Windows CE based Embedded Controller.
It has 7 Inch wide color display with Touch panel.

- *7" wide color TFT display*
- *800 x 480 resolutions, 260K colors*
- *Touch panel*
- *SD card supports*
- *Ethernet supports*
- *RS232 x2 / RS485 x1 or RS232 x3*
- *Speaker with Audio output*
- *Real time clock (Battery backup)*
- *Visual Basic, EVC supports*
- *USB I/F (active sync)*
- *Keyboard or Mouse supports*
- *ARM9 32bit 266MHz processor*
- *Windows CE 5.0*
- *64MB FLASH, 64MB SDRAM*
- *Size (W,D,H) : 220 x 150 x 50 mm*

COMFILE TECHNOLOGY

550 Pilgrim Drive Suite K Foster City, CA 94404
Call : 1-888-9CUBLOC (toll free)
1-888-928-2562
+ 14-Day Money-Back Guarantee

Log on to
www.comfiletech.com
for your FREE catalog!

Intelligent Display & Touch Engine

IntelliLCD

The new itl710 serial-controlled display makes it easy to add a full color touch interface to any project ! Connect to any controller with RS232, such as our CUBLOC modules. Then send simple commands to create interface screens with buttons, sliders, custom line graphics, and much more.

- *7" wide TFT color Touch screen*
- *Support True type windows fonts*
- *RS232 Interface*
- *800 x 480 resolutions*
- *260K colors*
- *SD card supports*
- *BMP file supports*
- *LED backlight*
- *Size (W,D,H) : 196 x 108 x 30 mm*

iTL710

$399 / Qty.1

■ BY FRED EADY

FIRMWARE YOU CAN TOUCH

I CAN REMEMBER AS A KID I USED TO BUILD simple little transistor circuits that would activate a relay when someone touched the doorknob to my room. My "DO NOT ENTER" adventures were far more exciting than the circuitry involved. As I recall, the base of the transistor was hung out to dry and connected to the doorknob with a loop of wire. When someone (my pesky little sister, for instance) injected noise into the transistor base via the doorknob, the transistor would turn on and pass current to a second transistor that would activate the relay, which was usually switching power to the most annoying buzzer I could get my hands on. The circuit worked most of the time.

I remember experimenting with that bunch of wires, capacitors, and transistors for days at a time. When I graduated from discrete transistor designs, I took the old doorknob buzzer trick over to integrated circuits and added on (at that time newly announced and extra loud) a Mallory Sonalert to inflict yet more pain on my family and friends.

Little did I know that the "noise" I thought I was injecting into the base of the doorknob alarm transistor was not really noise at all. Those simple little touch circuits I built as a kid were really sensing a change in capacitance. The doorknob circuits were "tuned" to be quiescent until an increase in capacitance was sensed. The increased capacitance was caused by the human body capacitor adding itself in parallel with the controlling capacitance of the doorknob circuitry. Normally, a free-running oscillator was used to produce a signal that was relative to the "untouched" capacitance. When the doorknob was touched, the additional human body capacitance detuned the free-running oscillator. The new and lower detuned frequency was then sensed by other pieces of the doorknob touch circuitry and used to activate the buzzer.

A leopard's spots never change and I'm still playing with touch circuits. However, these days, my circuits are constructed with CPLDs (Complex Programmable Logic Device) and microcontrollers. The neat thing is that the basics of touch control have not changed. We still need a free-running oscillator and a sensing circuit to make noise with a buzzer. Now that I'm all grown up, noisy buzzers are no longer my thing. Instead, we'll build some touch circuitry that will allow us to use touch sensors in places that normally require a mechanical switch.

It seems that a certain Microchip application engineer named Thomas Perme may have been hanging loops of wire on doorknobs in his younger days, as well. I found this out by way of Michelle Figor, my public relations contact at Microchip. She hooked me up with Tom and his set of capacitive sensing application notes. As a result, I've become dangerous with capacitive sensing circuitry and firmware. By the time we've finished our capacitive sensing discussion, you'll be just as dangerous as I am.

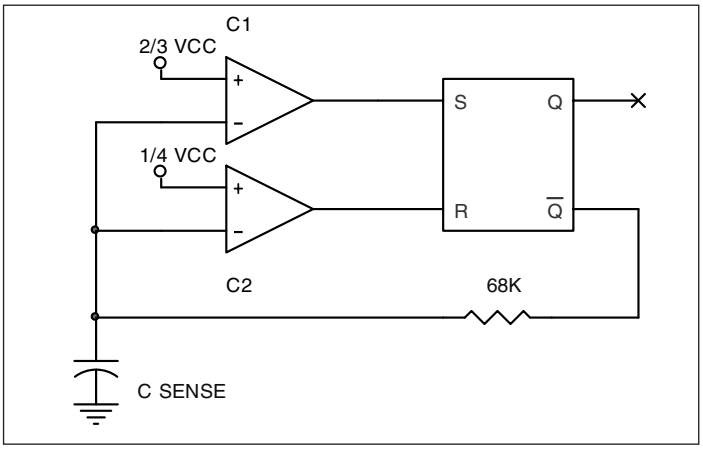

■ FIGURE 1. The comparators (C1 and C2) are physically located within the PIC18LF4620. A Xilinx X2C264A contains the gates and buffers necessary to form the SR Latch.

CAPACITIVE SENSING 101

Rather than just talk about the basics of capacitive sensing, let's put some hardware and firmware together

to gain an understanding of the capacitive sensing process. Take some time to carefully study Schematic 1. If you're a regular reader of Design Cycle, the Xilinx XC2C64A portion of Schematic 1 should look familiar as it is a schematic view of the Xilinx CPLD development board we discussed in an earlier edition of this column. Those of you that have experience with PICs will see a rudimentary PIC18LF4620 hardware layout on the far right of Schematic 1. However, what you see in this schematic is not as it seems. What you really see in Schematic 1 is actually depicted in Figure 1.

The circuitry you see in Figure 1 is configured to act as a relaxation oscillator. The frequency of the oscillations is controlled by the 68K resistor and the sense capacitor. In this case, the sense capacitor is really a touch pad. If the term "RC oscillator" comes into your head, keep it there as that's what you don't immediately see in Schematic 1 and Figure 1.

The two comparators depicted in Figure 1 form a voltage window that is used to manipulate the SR Latch. The idea is to define a voltage window that lies between the extreme limits of the power rail voltage. The upper and lower limits of the voltage window must be set as to allow the voltage swings within the voltage window to logically switch the comparator outputs in a reliable manner. So, to meet those requirements we can set the high voltage trip point at approximately two thirds of the power supply rail. Putting a calculator to the two thirds voltage value of a +3.3 volt power rail means that we must feed C1's V+ input with +2.20 volts. We will set the lower limit of the comparator voltage window to one fourth of the power rail, which works out to be 0.825 volts for a +3.3 volt system.

If you're wondering where the science that supports the comparator window voltage selection is located, you won't find it spelled out specifically in print. The details behind the voltage limits can be

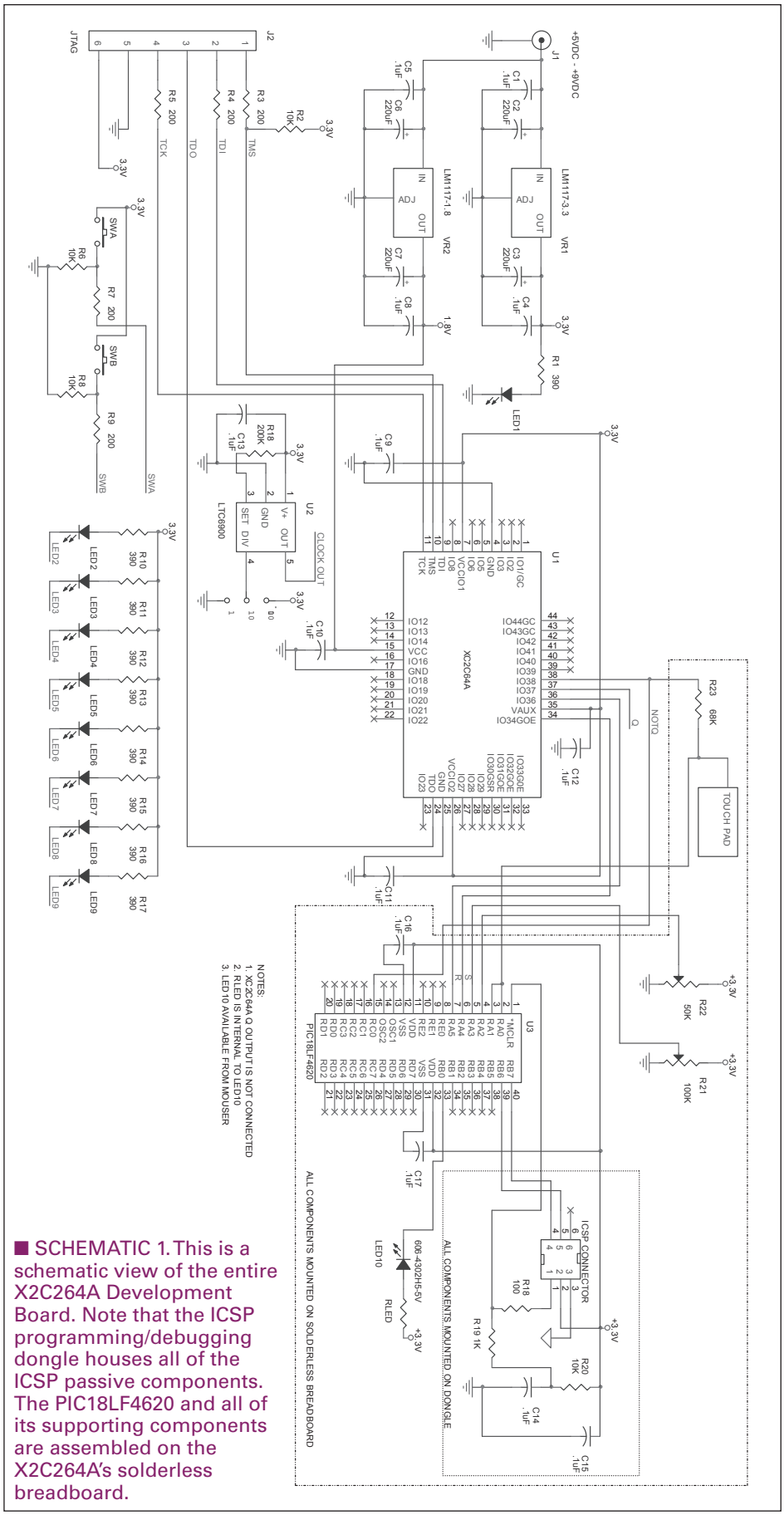

■ SCHEMATIC 1. This is a schematic view of the entire X2C264A Development Board. Note that the ICSP programming/debugging dongle houses all of the ICSP passive components. The PIC18LF4620 and all of its supporting components are assembled on the X2C264A's solderless breadboard.

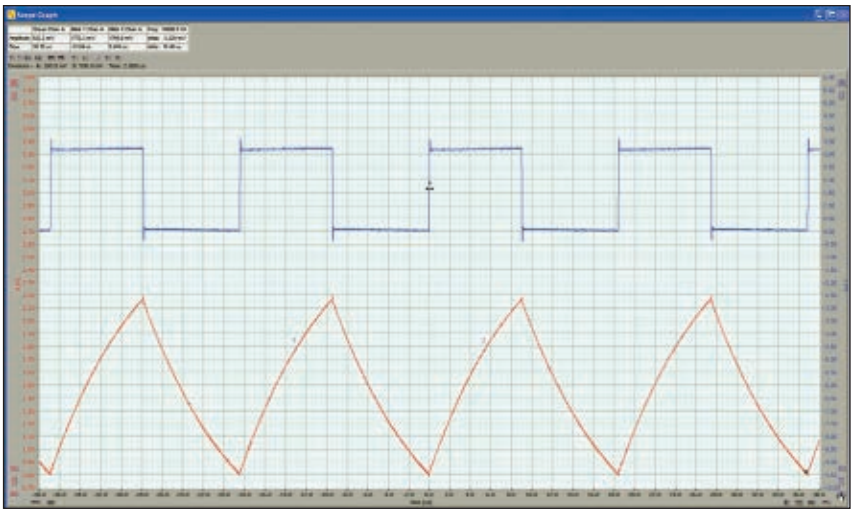

■ SCREENSHOT 1. The square wave trace is the signal at the SR Latch output pin. The sawtooth waveform represents the RC circuit's charge and discharge cycles that are occurring inside of the comparator voltage window we defined.

deduced logically. For the comparator outputs to change reliably and to allow the relaxation oscillator to function properly, the upper limit comparator reference voltage (+2.20 volts) must be met or exceeded by the rising voltage across the sense capacitor. Conversely, the falling voltage across the sense capacitor must meet or dip slightly below the lower comparator reference voltage (0.825 volts) to force a logic level change at the lower comparator's output. The aforementioned comparator switching conditions cannot be reliably met if the comparator reference voltages lie at the maximum and minimum levels of the power rail. In reality, one could not expect the sense capacitor voltage to reach the upper power rail or retract to ground level on a regular basis. We also want to choose comparator window voltages that will provide a wide enough window to keep the high (C1) comparator and low (C2) comparator switching thresholds a safe distance apart.

Now that you know what you're looking for, let's take another look at Schematic 1. I have chosen to power my relaxation oscillator with +3.3 volts as the Xilinx XC2C64A I/O works well in +3.3 volt systems. Thus, it would be wise to choose +3.3 volt-compatible parts for the rest of the relaxation oscillator circuitry. The PIC18F4620 is a +5.0 volt part. However, the PIC18LF4620 can operate with a +3.3 volt power rail. This is a good thing as the 4620 contains the pair of comparators you see in Figure 1. Potentiometers R21 and R22 form simple voltage dividers that supply the 2/3 Vcc and 1/4 Vcc comparator reference voltages to the Vin+ pins of the PIC's internal comparators. The 4620's internal comparators are configured as two independent units with outputs that are directed to a pair of I/O pins, which are labeled S and R in Schematic 1. Comparator C1's reference input (Vin+) is connected to I/O pin RA3. The Vin+ reference input for comparator C2 is I/O pin RA2. Comparator C1 — whose output is configured to invert — is used to drive the S (set) input of the SR Latch. When the voltage at the Vin- pin of comparator C1 exceeds the reference voltage (+2.20) applied to the C1 VIN+ comparator input, the output of comparator C1 will switch to a logical high level. The logical high applied to the SR Latch S (set) input by the output of comparator C1 will drive the SR Latch Q output pin logically high and the /Q SR Latch output pin logically low. Comparator C2 is configured to not invert its output. Thus, when the voltage at the Vin- pin of comparator C2 falls below the reference voltage (+0.825 volts) applied to the C2 Vin+ comparator input pin, the output pin of comparator C2 will switch to a logical high level. The logical high applied to the SR Latch R (reset) input by the output of comparator C2 will drive the SR Latch Q output pin logically low and the /Q SR Latch output pin logically high. When the SR Latch /Q output pin goes logically high, the sense capacitor charges through the 68K resistor. The sense capacitor discharges when the SR Latch /Q output pin switches to a logical low state. The logic sequence I've just described is that of a typical SR Latch. The PIC18LF4620 C source code for our relaxation oscillator comparators is very simple and looks like this:

■ PHOTO 1. The 68K resistor looks like a 6.8K resistor as the orange band seems to be more red than orange. Not to worry. I measured the resistor's value and it really is a 68K part.

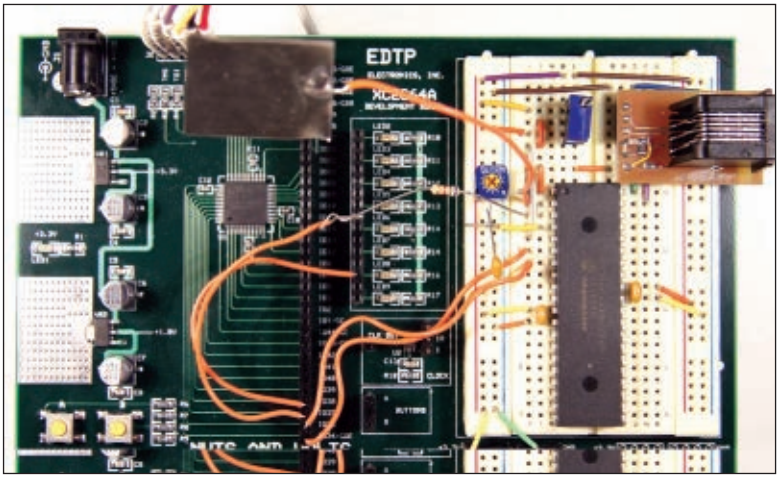


```
void main(void)
{
     TRISA = 0b11001111;   //C1,C2 outputs enabled
     CMCON = 0b11010011;   //invert C1 output
 ADON = 0;                 //turn off A2D

     // do nothing forever
     do{
          NOP();
     }while(1);
}
```

We don't need to run any algorithms to use the

services of the 4620's comparators. Aside from configuring the comparators with the CMCON register, all we really need to do is make sure the comparator input pins are configured as inputs and the comparator output pins are configured as outputs. Since we won't need the analog-to-digital converter, it's a good idea to turn off all of the A-to-D stuff.

The 4620 is a nifty part but it does not contain an SR Latch logic block. That's where our CPLD knowledge and the XC2C64A CoolRunner-II come into play. We already know how the SR Latch Q and /Q outputs are influenced by the S and R inputs. So, all we need to do is translate the SR Latch behavior to some VHDL source code that looks like this:

```
library IEEE;
use IEEE.STD_LOGIC_1164.ALL;
use IEEE.STD_LOGIC_ARITH.ALL;
use IEEE.STD_LOGIC_UNSIGNED.ALL;

ENTITY srlatch IS PORT(
     s,r: IN std_logic;
     q,qnot: BUFFER std_logic);
END srlatch;

ARCHITECTURE operation OF srlatch IS
BEGIN
     PROCESS (s,r) BEGIN
          IF (r='1' AND s='0') THEN
               q<='0';
               qnot<= NOT q;
          ELSIF (r='0' and s='1') THEN
               q<='1';
               qnot<= NOT q;
          END IF;
      END PROCESS;
END operation;
```

VHDL is very similar to C, which makes it a bit easier for the VHDL beginner to swallow the coding concepts. The ENTITY section of the SR Latch VHDL source defines the latch inputs and outputs. The SR Latch uses state and memory techniques to determine the logical condition of the Q and /Q outputs. That is, only a zero-to-one on the S or R inputs will cause a change in the Q and /Q outputs. Otherwise, when both the S and R inputs are logically zero simultaneously, the Q and /Q outputs retain their last states. Thus, the BUFFER definition tells the compiler that the Q and /Q outputs need to be read internally so their states can be determined and used according to the behavioral operation of an SR Latch. The actual SR Latch logic is implemented within the ARCHITECTURE area of the VHDL code. The only odd thing about the VHDL source is the "<=" operator. The "<=" states that the logic state on the "=" side of the operator is transferred to the output on the "<" side of the operator. I don't think you will have any problem following the logic of the VHDL code I've presented. So, let's visually walk through the operation of the relaxation oscillator we just designed using Screenshot 1 as a reference.

The sawtooth waveform in Screenshot 1 represents the charging and discharging of the sense capacitor within the bounds of the voltage window we created with the comparators. I placed the CleverScope probe on the sense capacitor side of the 68K resistor to obtain the sawtooth data. Note that the sawtooth waveform begins its positive trek just below the 0.80 volt mark. The square waveform that is in phase with the sawtooth waveform is taken from the second CleverScope probe, which I attached to the XC2C64A SR Latch /Q output pin. Note that the square waveform is always transitioning to a logically high level when the sawtooth waveform is at the 0.80 volt level. Recall that we defined our C2 comparator trip point at 0.825 volts. So, the logic we defined for comparator C2 is working as designed. When the sense capacitor voltage falls to 0.825 or below, the /Q SR Latch output pin is driven high by the output pin of comparator C2 and the sense capacitor charging cycle begins. At this point, the SR Latch S input is being presented with a logical low. As the voltage on the sense capacitor rises past 0.825 volts, the R input of comparator C2 transitions logically from one to zero, which puts both SR Latch S and R inputs at a logically low level. When both S and R inputs are logically low, the current logic states of the Q and /Q output pins are reserved. Note that the square waveform at the /Q output pin retains its current logic level until the sense capacitor reaches the +2.20 trip voltage of the C1 comparator. When C1 is tripped, the S input of the SR Latch is driven high and the Q output snaps to a logical high state. With the Q SR Latch output pin being logically high, the /Q SR Latch output is driven logically low and a sense capacitor discharge cycle begins. The output pin will always transition to a logical low level each time the +2.20 voltage level is sensed across the sense capacitor by comparator C2. During the discharge

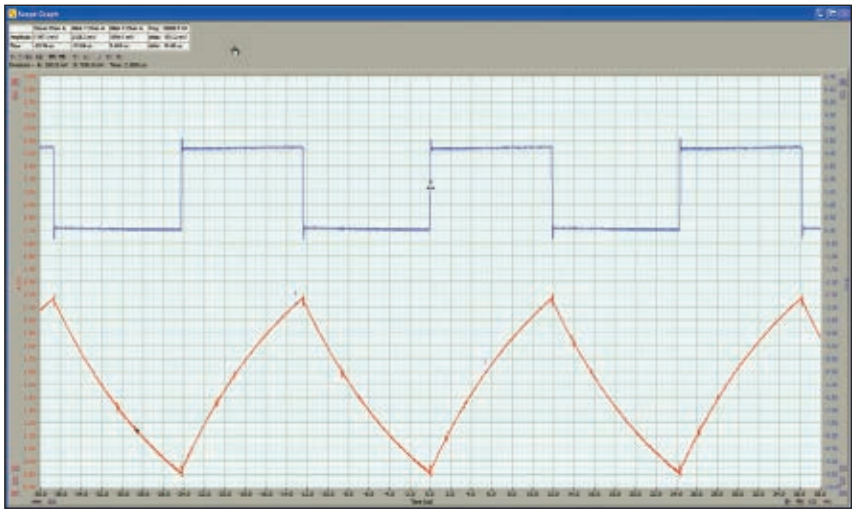

■ SCREENSHOT 2. The frequency of the relaxation oscillator in Screenshot 1 is approximately 54 kHz. The presence of my finger on the tin pad reduced the frequency of the relaxation oscillator to a little less than 42 kHz.

cycle, both the SR Latch S and R inputs are logically low retaining the last states of Q and /Q, which happen to be logically high and logically low, respectively.

The circuitry that generated the waveforms in Screenshot 1 was built up around and upon the XC2C64A Development Board. My relaxation oscillator lashup is shown in Photo 1. The rectangular piece of tin you see floating above the XC2C64A Development Board is my attempt at a crude touch sensor. The idea is that I can touch or get very close to touching the tin sensor and force a change in the relaxation oscillator's frequency. I insulated my finger from the tin pad with the plastic wrapper that the tin sheet came packaged in. I was able to significantly alter the relaxation oscillator's frequency by touching the insulated tin pad. Touching the insulated tin pad produced the waveforms you see in Screenshot 2.

The period of the square waveform in Screenshot 1 is approximately 18.5 µs. Converting this period to frequency yields a relaxation oscillator frequency that is slightly over 54 kHz. The "touched" square waveform you see in Screenshot 2 measures in at 24.25 µs, which equates to a bit over 41 kHz. I noticed that the more finger area I could put on the tin pad, the lower the relaxation oscillator frequency. This is good. My body capacitance added into the touch pad capacitance to decrease the relaxation oscillator's frequency. Now what??

MEASURE THE OSCILLATOR'S FREQUENCY

The /Q output of the XC2C64A is supplying us with a sharp looking square waveform that changes its period with the touch of a finger. We normally measure a waveform period in terms of time. Waveform frequency is most often defined in Hertz. We've already seen that the frequency of the "untouched" square waveform in Screenshot 1 is higher than the frequency of the "touched" square waveform we captured in Screenshot 2. Thus, if we were to construct a means of counting the number of square waveform rising edges that occur within a constant time period, we could determine if our tin touch pad was idle or being touched. We don't need a precise frequency determination to sense a touch. We need only compare the untouched pad frequency count to a touched pad frequency count capture. To make this happen, all we need to do is add one wire to our XC2C64A Development Board touch circuit and awaken some additional PIC18LF4620 resources. The additional wire connects the XC2C64A's /Q output pin to the PIC18LF4620's TIMER1 clock input pin (RC0).

To get an accurate comparison count, we'll need to gate the clock pulses emanating from the XC2C64A output pin with a precision time base. The 4620 has a number of timers and we've already reserved TIMER1 as our 16-bit pulse counter. Let's assign the 4620's TIMER0 as our eight-bit time base. Since the time base counter needs a precise timing source, we'll need to fire up the internal oscillator. Here's the code that sets us up with an 8 MHz system clock and the timers it supports:

```
//*********************************************************
//*    INITIALIZE CLOCK AND IO PORTS
//*********************************************************
      OSCCON = 0x70;            //8MHz internal clock
      PLLEN = 0;                //PLL off
      TRISA     = 0b11001111;   //C1 and C2 outputs
                                //enabled
      TRISB     = 0b11111100;   //RB0 is LED output -
                                //RB1 is optional for
                                //scope
      TRISC     = 0b11111111;   //T13CKI is input - RC0
      TRISE     = 0b00000111;   //turn off PSPMODE
                                //(parallel slave port)
      ADON      = 0;            //turn off A2D
      CMCON = 0b11010011;       //invert C1 output - 2
                                //comparators
//*********************************************************
//*    INITIALIZE TIMERS
//*********************************************************
      T0CON = 0b11000100;       //8-bit counter - 1:32
                                //prescale - time base
      T1CON = 0b00000110;       //8-bit read - no
                                //prescale - counter
```

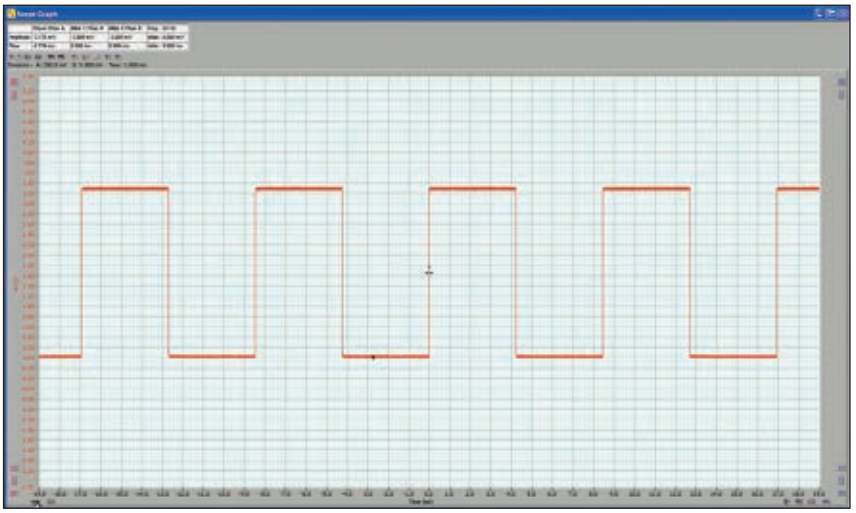

I added this statement to the TIMER0 interrupt handler code to check the TIMER1 gate window:

```
LATB1 ^= 1;
```

Every time the sensor interrupt handler is called, RB1 will toggle. I attached a CleverScope probe to the RB1 pin of the

■ SCREENSHOT 3. Yes. We could have used the 8 MHz cycle time and the TIMER0 prescale value to compute the gating window. However, it's much easier to hang a CleverScope probe on the unknown signal. We won't use this timing in our touch calculations. I just thought you might be interested in seeing it.

4620 and captured the TIMER1 gating signal you see in Screenshot 3. According to Screenshot 3 and my old eyes, the pulses from our XC2C64A/PIC18LF4620 relaxation oscillator are counted by TIMER1 in gate intervals of 4.2 ms. For those of you that just can't do without the math, our CleverScope observation is pretty danged close. Here's the math behind Screenshot 3:

SCANTIME = 256 * (4 * Tosc) * PS

where:
Tosc = 125 ns (1 / 8 MHz)
PS = 32 (prescale value)

SCANTIME = 256 * (4 * 125 ns) * 32 = 4.096 ms

Our CleverScope display number is actual scan time as it takes the CPU overhead (branching to the interrupt service routine, storing status, returning from the interrupt, restoring status, etc.) into account.

Note that I also added an LED at I/O pin RB0 to provide a visual indication of when the tin touch pad is being touched. Here's the code that supports the touch LED:

```
char btn_pressed;        // 0x00 when idle, 0xFF pressed
#define btn_LED LATB0    // LED output pin
#define ON      0        // LED ON
#define OFF     1        // LED OFF
//*********************************************************
//*     MAIN ROUTINE
//*********************************************************
void main(void)
{
      init();

      // signal button status
      do{
        if(btn_pressed)
        {
                btn_LED = ON;
        }
        else
        {
                btn_LED = OFF;
        }

      }while(1);
```

I realize that using an entire byte as a bit flag is inefficient (char btn_pressed;). However, we have microcontroller resources to spare and it's the capacitive touch sensing concepts we are in search of at this moment. We'll get more elegant with our touch sensing code when the time comes. So, let's look at the code that does all of the work:

```
void reset_timers(void)
{
    TMR1L   = 0;         // clear TIMER1 low byte
    TMR1H   = 0;         // clear TIMER1 high byte
    TIMER1ON;            // start TIMER1
    TMR0L   = 0;         // clear TIMER0
    TMR0IF  = 0;         // clear TIMER0 interrupt flag
}

stabilize_pass = 200;    //iterations to do before
                         //averaging begins
average_pass = 17;       //passes between averaging
trip_val = 32;           //sensitivity

//*********************************************************
//* TOUCH SENSOR INTERRUPT HANDLER ROUTINE
//*********************************************************
void interrupt SENSOR(void)
{

    if((TMR0IF && TMR0IE))
    {
        //uncomment this next line to
        //see the gating interval
        //LATB1 ^= 1;   //get button count
        TIMER1OFF;
        TMR0IF = 0;
        timer1_val = make16(TMR1H,TMR1L);
        timer1_raw = timer1_val * 16;

        //stabilize the btn_average value
        if(stabilize_pass > 0x00)
        {
            --stabilize_pass;
            btn_average = timer1_raw;
            reset_timers();
        }
        else
        {
            //check for button pressed
            if(timer1_raw < (btn_average - trip_val))
            {
                btn_pressed = 0xFF;      //pressed
            }
            else if(timer1_raw > (btn_average-trip_val))
            {
                btn_pressed = 0x00;      //not pressed
            }

            //compute average
            if(--average_pass == 0)
            {
                btn_average = btn_average +
                    (timer1_val - (btn_average / 16));
                average_pass = 17;
            }
            reset_timers();
        }
    }
}
```

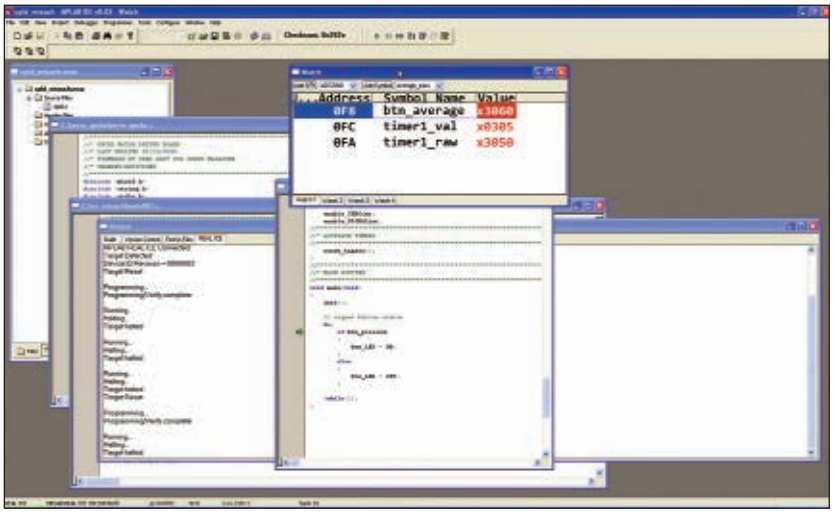

■ SCREENSHOT 4. The btn_average value is an "untouched" average count accumulated after 200 iterations.

SOURCES

HI-TECH Software — **www.htsoft.com**
HI-TECH PICC-18 C Compiler

Xilinx — **www.xilinx.com**
XC2C64A

Microchip — **www.microchip.com**
PIC18LF4620

Saelig Unique Electronics — **www.saelig.com**
Clever Scope

Every 4.2 ms, the touch sensor interrupt handler code is executed. The very first thing we want to do is preserve our touch sensor count. We do this by turning TIMER1 off. The 16-bit count accumulated within the 4.2 ms window is held in TIMER1's high and low registers. The count values we collect are used to compute a 16-point running average, as well as provide a touched and untouched raw count. Here's the averaging formula that everything revolves around:

btn_average = btn_average + (timer1_val - (btn_average / 16));

The btn_average code is a 16-point average algorithm that doesn't need 16 variables to produce an average. The current count is given 1/16 of the average weight with the running average holding 15/16 of the average weight. The variable timer1_val is the 16-bit count we preserved when we turned off TIMER1 upon entering the touch sensor interrupt handler.

A touch sensor is being touched when the raw count falls below the running average count:

Touched when: timer1_raw < (btn_average - trip_val)

Conversely, when the raw count is higher than the running average the tin pad's capacitance is not being supplemented by a human finger:

Not touched when: timer1_raw > (btn_average - trip_val)

To establish a stable beginning point, we run the sensor interrupt handler 200 times without computing an average:

```
if(stabilize_pass > 0x00)
{
        —stabilize_pass;
        btn_average = timer1_raw;
        reset_timers();
}
```

Instead, we stuff the raw count into the btn_average variable while the stabilize_pass variable is greater than zero. A beginning averaged value (over 200 iterations) of an untouched tin pad is illustrated by the values you see in Screenshot 4. My finger on the insulated tin pad produced the numbers you see in Screenshot 5. The LED illuminated when my finger touched the insulated tin pad and went dark as my finger moved away from the touch pad.

THE HARD WAY

We've just assembled a simple capacitive touch system the hard way. There's no harm in that. We covered the basics of capacitive touch sensing and built some working hardware around the theory. Now you understand how capacitive touch systems work. So, throw this circuit together and play with the trip value number. You'll see that you can illuminate the LED by simply getting close to the tin touch pad.

You can get sheets of tin, brass, and copper at your local hobby shop. In the next installment of Design Cycle, I will show you how to design a capacitive touch system the easy way. See you next time! **NV**

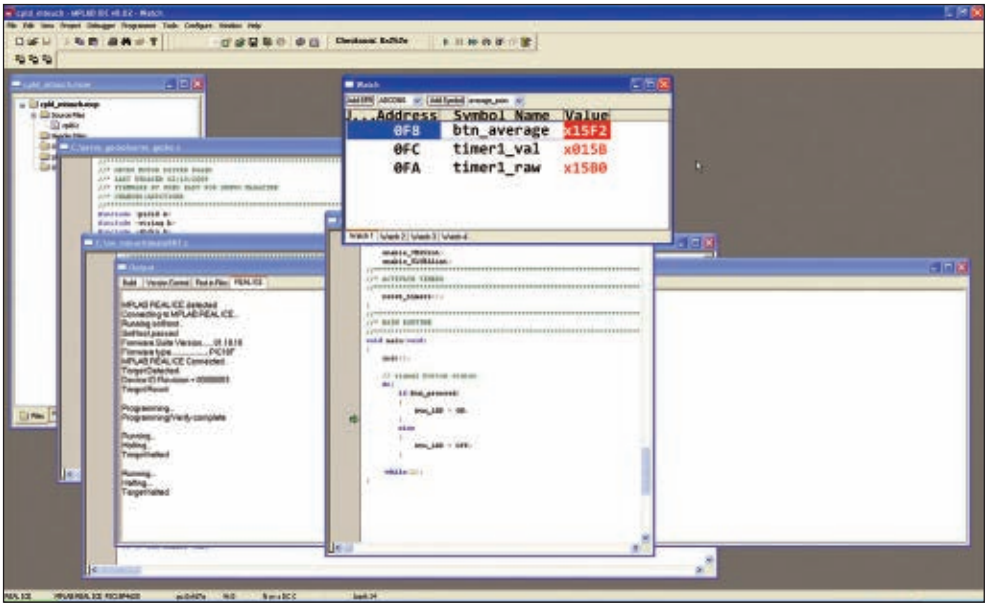

■ SCREENSHOT 5. Note here that the "touched" timer1_val counts are lower than the "untouched" timer1_val counts you see in Screenshot 4. However, the running average minus the trip value is high enough to keep us in the "LED ON" state.

CONTACT THE AUTHOR

■ *Fred Eady can be contacted via email at fred@edtp.com.*

Any Design... Anytime.

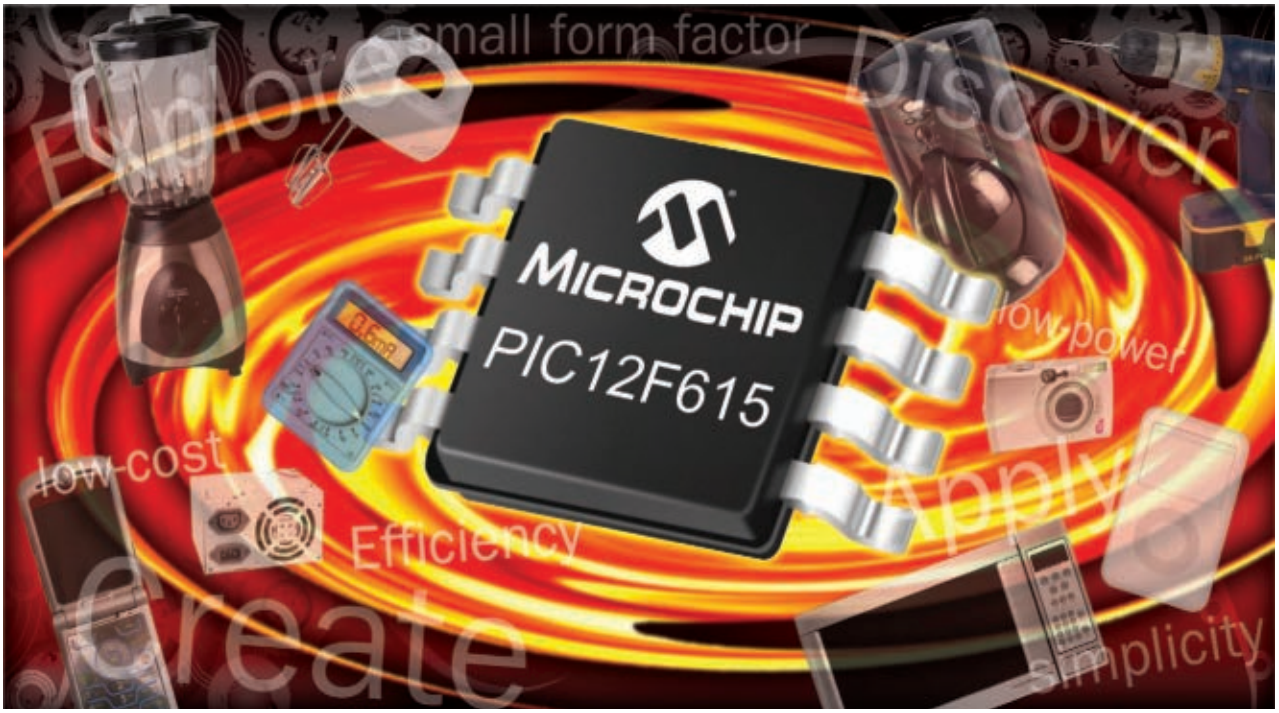

Incredibly Versatile, Incredibly Low Power, 8- and 14-pin PIC® Microcontrollers from Microchip.

Microchip's latest low pin count PIC microcontrollers combine the simplicity of an 8-bit architecture with innovative features designed to add intelligence and functionality to a wide variety of applications. Whether you're adding a keypad to a convection oven, an intelligent cooling fan to a power supply, or battery management features to a digital camera, these new PIC microcontrollers can handle the task. With available high-voltage variants and a footprint as small as 4mm x 4mm, this family of low-cost microcontrollers fits easily into any design.

Purchase and program your PIC® microcontrollers and related development tools at... microchip DIRECT www.microchipdirect.com

Product	Flash Program Memory Bytes (Words)	RAM Bytes	I/O Pins	10-bit A/D Channels	Comparators	Timers	Packages
PIC12F609*	1.75K (1K)	64	6	—	1	1-16 bit, 1-8 bit, 1-WDT	8 pin PDIP, SOIC, MSOP, DFN
PIC12F615*	1.75K (1K)	64	6	4	1	1-16 bit, 2-8 bit, 1-WDT	8 pin PDIP, SOIC, MSOP, DFN
PIC16F610*	1.75K (1K)	64	12	—	2	1-16 bit, 1-8 bit, 1-WDT	14 pin PDIP, SOIC, TSSOP, QFN
PIC16F616*	3.5K (2K)	128	12	8	2	1-16 bit, 2-8 bit, 1-WDT	14 pin PDIP, SOIC, TSSOP, QFN

*High-voltage variants available.

Registration is now open!

Microchip Technology MASTERS 08 CONFERENCE
www.microchip.com/MASTERs

MICROCHIP
www.microchip.com/PIC16F61X

Microcontrollers • Digital Signal Controllers • Analog • Serial EEPROMs

The Microchip name and logo, the Microchip logo, and PIC are registered trademarks of Microchip Technology Incorporated in the USA and in other countries. All other trademarks mentioned herein are property of their respective companies. ©2008, Microchip Technology Inc.

The Neatest Stuff!

To Make Your Summer Projects Fun!

www.ramseykits.com

Portable Digital Audio Recorder With 1GB SD Memory

- ✔ Built-in variable angle high quality stereo condenser microphones!
- ✔ External mic and line inputs, headphone and line outputs!
- ✔ Includes 1GB SD card!
- ✔ Analog auto-gain and limiter, sets the level for you!
- ✔ Easy-to-read backlit 128x64 LCD display!
- ✔ Overdub to record narration, singing or instruments over existing recordings!
- ✔ Built-in effects processor, tuner, and vocal cancel features!
- ✔ Records MP3 (32-320kbps) and uncompressed WAV (44.1/48kHz, 24 bit) formats!
- ✔ Includes USB cable, soft case and Li-Ion rechargeable/replaceable battery!

The brand-new TASCAM DR1 is the latest and greatest in convenient and affordable pro-quality portable recording! They have brought their world-class audio expertise to the world of handheld recording, and put it right into your pocket! The DR1 is perfect for live recordings, band rehearsals, live interviews and field recording, religious services, and a whole lot more.

The built-in high-quality stereo condenser microphones include a unique variable angle mechanism to record from any angle, giving you far greater positioning flexibility than any competing recorder! It also features dual external mic inputs, as well as a line input, line output and headphone output! Not sure about levels? Just enable the auto-gain and limiter, and it does the job for you! Advanced features include multiple reverb effects, EQ, detune, autopan, Lo-Fi, and more. And it INCLUDES a 1GB SD card to give you nearly 500 minutes of MP3 recording at 128kbps! Also includes a USB cable for easy file access, a custom soft-case, and an easy to replace Li-Ion rechargeable battery pack that charges with standard USB power.

DR1 Tascam Portable Digital Audio Recorder With 1GB SD Memory **$298.95**

Rat Blaster Varmint Repeller

- ✔ Harmless removal of pests!
- ✔ Covers 3,000 square feet!
- ✔ Programmable frequencies!
- ✔ High quality transducer

The Rat Blaster has been our most popular summer kit for years! We designed it to compete with those "big buck" ones you see advertised, but made it even better! We started with a unique circuit featuring programmable frequencies allowing you to customize the protection to a specific varmint! From those pesky deer eating your shrubs to the garbage can infringing dogs and cats, and everything in-between!

A high quality transducer is used to provide up to 3,000 square feet of coverage. Because a lot of people build these into their barns and garages, the case is optional. Requires 12-15VDC or adapter.

RB1	**Rat Blaster Varmint Repeller Kit**	**$59.95**
CRB	**Custom Metal Case Set**	**$39.95**
AC125	**110VAC Power Adapter**	**$9.95**

Laser Trip Sensor Alarm

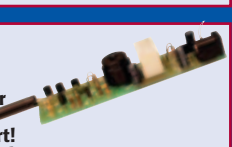

- ✔ True laser protects over 500 yards!
- ✔ Audible and visual alert!
- ✔ 5A internal trigger relay!
- ✔ Includes laser source!

At last, a true laser beam alarm within the reach of the hobbyists! Comes complete with a small key-chain type high power laser pointer, laser sensor, laser detector, and PVC enclosure for the detector.

The unique break-away circuit board allows you (if desired) to remotely locate the sensor from the detector board. Range is over 500 yards, and with the addition of simple mirrors, complete perimeter protection is a snap! The detector board includes both audible and visual indicators plus a built-in 5A relay provides closures for any alarm functions you need. If you are looking for true laser beam alarm protection at a hobby price, it can't be beat! The Detector requires 9-18VDC or a standard 9V battery.

LTS1 Laser Trip Sensor Alarm Kit **$29.95**

Subminiature 40 Watt Stereo Audio Amplifier

- ✔ Dual 20W amps in one single SMT device!
- ✔ Balanced & unbalanced high impedance inputs!
- ✔ Built-in click & pop suppression!
- ✔ Selectable gain from +22dB to +36dB
- ✔ No heatsink required!

The EXTREME big brother to the UAM2! This incredible little module produces dual 20W audio output channels or a single bridged 40W output! And just like the UAM2, it's a highly efficient Class D amplifier that produces no heat!

Features 4 gain settings, short circuit, overvoltage, and thermal protection as well as a programmable thermal flag. Handy screw terminals and Euroblocks are used for easy connection. Board measures 2.5" square. Requires 18VDC at 2.6A for full output.

UAM4	**40W Audio Amplifier Kit**	**$69.95**
SPS183	**18VDC 3.3A Power Supply**	**$49.95**

Subminiature 20 Watt Audio Amplifier

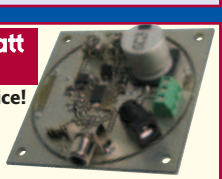

- ✔ 20W from one SMT device!
- ✔ Super efficient Class D!
- ✔ No heatsink required!
- ✔ Super clean output!
- ✔ Small board design!

Our original 20W audio module that everyone fell in love with! Produces a clean crisp 20 watts of audio output power from one SMT device! But unlike typical Class A or AB amplifiers that leave transistors biased on all the time, this little beauty only produces power into the load of your speaker!

That means there is virtually no heat generated! And THAT means there is no heatsink required! Features 4 input gain settings, auto short and thermal protection and auto shutdown. The unique 2.6" square board can be snapped out into a circle to be double face taped to the back of a speaker! Requires 18VDC at 1.5A for full output.

UAM2	**20W Audio Amplifier Kit**	**$34.95**
SPS18	**18VDC 1.7A Power Supply**	**$39.95**

Professional USB to Digital Turntable

- ✔ Pro-quality high-torque direct drive turntable
- ✔ S-Shape tone arm for lower distortion and superior tracking
- ✔ Digital features like Key Lock (Master Tempo) and S/PDIF output
- ✔ 3 playback speeds (33, 45, 78 RPM), plus Quartz Lock and target light
- ✔ Pitch control slider with selectable range (±8%, 12%)
- ✔ Includes Stanton 500B cartridge, slip mat and cloth dust cover

Got shelves full of classic albums? Wondering what to do with all that vinyl? Even devoted vinyl enthusiasts know that the time has come! This Stanton digital kit solves all your problems, and there is no need to buy any additional software or interfaces! Features a USB output for a direct PC connection, RCA stereo line/instrument outputs and a digital S/PDIF digital coaxial output so it's ready for any setup you have! And unlike the "low-end" units out there (USB record players!), your vinyl will reproduce flawlessly, just as it was designed to! Included Cakewalk Pyro-5 software even helps you revive and restore those worn out LP's to a digital file that will last forever!

T90USB Stanton USB Digital Turntable Package **$298.95**

Summer Travel! Have Fun & Save!

OBDII CarChip Pro

- ✔ Monitor vehicle performance to save gas!
- ✔ Stores up to 300 hours of trip details!
- ✔ Records time, date, distance, speed, events and up to 4 separate engine parameters!
- ✔ Records extreme acceleration and braking!
- ✔ Automatic accident log, records the last 20 seconds before impact!
- ✔ View and reset engine diagnostic trouble codes!
- ✔ Test for preliminary emissions status!

No comments are necessary this summer about the cost of gas! At 4 bucks or more you have to make sure your vehicle is in tip-top shape for the most economical performance. Did you know old spark plugs can reduce fuel economy by 30%? It gets worse... a bad oxygen sensor cuts it by 40%! And that relates to a lot of extra gas and money!

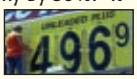

With the CarChip Pro you'll have complete access to all your vehicles diagnostic data at your fingertips! Sort miles by type (business, personal or driver), set thresholds for alarms, calculate gas mileage, log extreme acceleration and braking, speed, engine parameters, and a whole lot more! And as you know, extreme acceleration does not equal fuel economy! Find out who's driving your vehicle like a race car...and deal with it! If you have a new driver in the family, monitor their performance and let them gain additional privileges with a good driving record! You have the proof!

No more taking your car in to see why your "check engine" light is on. The CarChip Pro will automatically provide the trouble codes and allow you to reset it! CarChip Pro includes storage for up to 300 hours of driving data! If you're unfortunate enough to be involved in an accident, it even records all the vehicle's parameters for the last critical 20 seconds of operation! Includes USB cable, software and complete instructions.

8226 Davis OBDII CarChip Pro **$99.95**

Passive Aircraft Band Monitor Receiver

- ✔ Monitors the entire 118-136 MHz aircraft band without any tuning!
- ✔ Great for air shows!
- ✔ Passive design, can be used onboard aircraft!
- ✔ Patented circuit and design!

For decades we have been known for our novel and creative product designs. Well, check this one out! An aircraft receiver that receives all nearby traffic without any tuning. It gets better... there is no local oscillator so it doesn't produce, and can't produce, any interference associated with all other receivers with an LO. That means you can use it onboard aircraft as a passive device! And what will you hear? The closest and strongest traffic, mainly, the one you're sitting in! How unique is this? We have a patent on it, and that says it all!

This broadband radio monitors transmissions over the entire aircraft band of 118-136 MHz. The way it works is simple. Strongest man wins! The strongest signal within the pass band of the radio will be heard. And unlike the FM capture effect, multiple aircraft signals will be heard simultaneously with the strongest one the loudest! And that means the aircraft closest to you, and the towers closest to you! All without any tuning or looking up frequencies! Just imagine its use at air shows! You'll be able to listen to all the air-to-ground communications as the airplanes amaze you with their stunts! It's like two shows in one!

Receiver sensitivity is less than 2uV for detectable audio. Headset cord is coupled as the antenna giving you great reception. Also includes a set of stereo ear buds. Runs on a standard 9V battery. Available thru-hole kit or SMT factory assembled & tested.

ABM1	**Passive Aircraft Receiver Kit**	**$89.95**
ABM1WT	**Factory Asmb SMT ABM1**	**$159.95**

ECG Heart Monitor

Learn how your heart works and monitor your rhythm with a real ECG! Provides visual and audible beat indicators as well as a monitor out for a real scope display! Uses reusable probe patches included. Uses 9V battery.

ECG1C **ECG Heart Monitor Kit** **$44.95**

Practice Guitar Amp & DI

Practice your guitar without driving your family or neighbors nuts! Works with any electric, acoustic-electric, or bass guitar. Plug your MP3 player into the aux input and practice to your favorite music! Drives standard headphones and also works as a great DI!

PGA1 **Personal Practice Guitar Amp Kit** **$64.95**

SMT Soldering Course

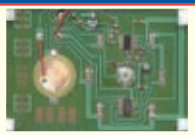

SMT is now a way of the hobbyist's life. But without practice, you will be certain to destroy! This learning course teaches you everything you need to know, and you build a neat "decision maker" project to boot!

SM200K **Practical SMT Solder Course** **$22.95**

LED Blinky

Our #1 Mini-Kit for 35 years! Alternately flashes two jumbo red LED's. Great for signs, name badges, model railroading, and more. Used throughout the world as the first learning kit for students young and old! Great solder practice kit. Runs on 3-15 VDC.

BL1 **LED Blinky Kit** **$7.95**

Laser Light Show

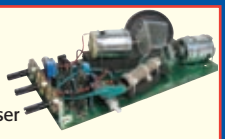

Just like the big concerts, you can impress your friends with your own laser light show! Audio input modulates the laser display to your favorite music! Adjustable pattern & speed. Runs on 6-12VDC.

LLS1 **Laser Light Show Kit** **$44.95**

Electronic Siren

Exactly duplicates the upward and downward wail of a police siren. Switch closure produces upward wail, releasing it makes it return downward. Produces a loud 5W output, and will drive any speaker! Horn speakers sound the best! Runs on 6-12VDC.

SM3 **Electronic Siren Kit** **$7.95**

Universal Timer

Build a time delay, keep something on for a preset time, provide clock pulses or provide an audio tone, all using the versatile 555 timer chip! Comes with circuit theory and a lots of application ideas and schematics to help you learn the 555 timer. 5-15VDC.

UT5 **Universal Timer Kit** **$9.95**

Voice Activated Switch

Voice activated (VOX) provides a switched output when it hears a sound. Great for a hands free PTT switch or to turn on a recorder or light! Directly switches relays or low voltage loads up to 100mA. Runs on 6-12 VDC.

VS1 **Voice Switch Kit** **$9.95**

Tone Encoder/Decoder

Encodes OR decodes any tone, 40 Hz to 5KHz! Add a small cap and it will go as low as 10 Hz! Tunable with a precision 20 turn pot. Great for sub-audible "CTS" tone squelch encoders or decoders. Drives any low voltage load up to 100mA. Runs on 5-12 VDC.

TD1 **Encoder/Decoder Kit** **$9.95**

RF Preamplifier

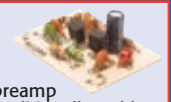

The famous RF preamp that's been written up in the radio & electronics magazines! This super broadband preamp covers 100 KHz to 1000 MHz! Unconditionally stable gain is greater than 16dB while noise is less than 4dB! 50-75 ohm input. Runs on 12-15 VDC.

SA7 **RF Preamp Kit** **$19.95**

Touch Switch

Touch on, touch off, or momentary touch hold, it's your choice with this little kit! Uses CMOS technology. Actually includes TWO totally separate touch circuits on the board! Drives any low voltage load up to 100mA. Runs on 6-12 VDC.

TS1 **Touch Switch Kit** **$9.95**

Walking Electronic Bug

Built around a pair of subminiature cell phone motors, this bug wanders around looking for things to bump into! Sensors below his LED eyes sense proximity and make him turn away! Steer him with flashlights too! Runs on two "N" batteries.

WEB1 **Walking Bug Kit** **$29.95**

Mad Blaster Warble Alarm

If you need to simply get attention, the "Mad Blaster" is the answer, producing a LOUD ear shattering raucous racket! Super for car and home alarms as well. Drives any speaker. Runs on 9-12VDC.

MB1 **Mad Blaster Warble Alarm Kit** **$9.95**

DTMF Encoder Decoder

Decodes standard Touch Tones from telephones, radios, or any other audio source. Detects and decodes any single digit and provides a closure to ground up to 20mA. Great for remote tone control Runs on 5VDC.

TT7 **DTMF Encode/Decode Kit** **$24.95**

Super Snoop Amplifier

Super sensitive amplifier that will pick up a pin drop at 15 feet! Full 2 watt output drives any speaker for a great sound. Makes a great "big ear" microphone to listen to the "wildlife" both in the field and in the city! Runs on 6-15 VDC.

BN9 **Super Snoop Amp Kit** **$9.95**

Water Sensor Alarm

This little $8 kit can really "bail you out"! Simply mount the alarm where you want to detect water level problems (sump pump!). When the water touches the contacts the alarm goes off! Sensor can even be remotely located. Runs on a standard 9V battery.

MK108 **Water Sensor Alarm Kit** **$7.95**

RF Actuated Relay

Just what you need when adding a preamp or power amp in line with an antenna! Auto senses RF and closes an on-board DPDT relay that's good to UHF at 100W! Also great to protect expensive RF test equipment. Senses as low as 50mW!

RFS1 **RF Actuated Relay Kit** **$19.95**

HV Plasma Generator

Generate 2" sparks to a handheld screwdriver! Light fluorescent tubes without wires! This plasma generator creates up to 25kV at 20kHz from a solid state circuit! Build plasma bulbs from regular bulbs and more! Runs on 16VAC or 5-24VDC.

PG13 **HV Plasma Generator Kit** **$64.95**

Air Blasting Ion Generator

Generates negative ions along with a hefty blast of fresh air, all without any noise! The steady state DC voltage generates 7.5kV DC negative at 400uA, and that's LOTS of ions! Includes 7 wind tubes for max air! Runs on 12-15VDC.

IG7 **Ion Generator Kit** **$64.95**

Tickle-Stick Shocker

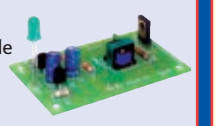

The kit has a pulsing 80 volt tickle output and a mischievous blinking LED. And who can resist a blinking light and an unlabeled switch! Great fun for your desk, "Hey, I told you not to touch!" Runs on 3-6 VDC.

TS4 **Tickle Stick Kit** **$12.95**

Stand Alone iPod Charger

We have always liked handy things that make sense. Well when I got my new iPod Touch, I couldn't deal with having to charge it with the computer. Hence, the evolution of this charger! Everyone here loves them. Just plug it in! That's it!

PCMP11U **110VAC iPod Charger** **$8.95**

IC AM/FM Radio Lab

Learn all about AM/FM radio theory, IC theory, and end up with a high quality radio! Extensive step-by-step instructions guide you through theory, parts descriptions, and the how's and why's of IC design. Runs on a standard 9V battery.

AMFM108K **AM/FM IC Radio Lab Kit** **$34.95**

SMT Multi-Color Blinky

The ultimate blinky kit! The 8-pin microcontroller drives a very special RGB LED in 16 million color combinations! Uses PWM methods to generate any color with the micro, with switchable speed selection. SMT construction. Includes extra parts when you lose them! 9V battery.

SBRGB1 **SMT Multi-Color Blinky Kit** **$29.95**

3-In-1 Multifunction Lab

The handiest item for your bench! Includes a RoHS compliant temp controlled soldering station, digital multimeter, and a regulated lab power supply! All-in-one small unit for your bench! It can't be beat!

LAB1U **3-In1 Multifunction Solder Lab** **$129.95**

Get The Catalog!

Get the latest 2008 Ramsey Hobby Catalog! ***112 value packed pages*** of the neatest goodies around with lots of new stuff! Order yours today on line or give us a call... Or download the PDF at www.ramseykits.com/catalog!

www.ramseykits.com

800-446-2295

ramsey
www.ramseykits.com
590 Fishers Station Drive
Victor, NY 14564
(800) 446-2295
(585) 924-4560

Where Electronics Is Always Fun!

✦ ***Build It!*** ✦ ***Achieve It!***
✦ ***Learn It!*** ✦ ***Enjoy It!***

Prices, availability, and specifications are subject to change. We are not responsible for typos, stupids, printer's bleed, bad political debates. My boss Robin said there have been too many typos lately, I hope I did better this time! Visit www.ramseykits.com for the latest pricing, specials, terms and conditions. Copyright 2008 Ramsey Electronics, LLC... so there!

Q&A

WHAT'S UP:

Join us as we delve into the basics of electronics as applied to every day problems, like:

- ✓ DC to DC Regulator
- ✓ Sump Pump Circuit
- ✓ Touch Probe Modification

■ WITH RUSSELL KINCAID

In this column, I answer questions about all aspects of electronics, including computer hardware, software, circuits, electronic theory, troubleshooting, and anything else of interest to the hobbyist. Feel free to participate with your questions, comments, or suggestions.

Send all questions and comments to:
Q&A@nutsvolts.com

REGENERATIVE RADIO

Q I've read a lot about amateur radio but still need to learn much about it. I've got a couple of years of engineering courses as background but still need to learn more. I'm familiar with positive and negative feedback in op-amps but how does it work, say, on one transistor (PNP or NPN)? Does regenerative radio use positive feedback? Could you provide a simple transistor regenerative radio feedback circuit and, more importantly, explain how it works and what are the advantages of this design?

— Jack Bbot

A I believe you are thinking about super regeneration; ordinary regeneration is too difficult to control. Super regeneration uses positive feedback but it gets squelched at a high rate (above the audio range) to produce maximum sensitivity. I adapted the circuit in Figure 1 from the 1960 ARRL handbook. The 2N5484 is a J-FET; the one I used was surface-mount but it is available as TO-92; Mouser part number 512-2N5484; cost is 11 cents.

The coil form is the cardboard tube from a toilet paper roll; I figure that everyone has one of those. The standard variable capacitor for AM broadcast is 15 pF to 365 pF which dictates a coil inductance of 229 µH to tune the low end of the dial at 550 kHz. I used the formula $L = N^2(R^2/(9R + 10LENGTH))$ to calculate the number of turns to be 98, where:

L is in microhenries
N = number of turns
R = radius of the coil form
LENGTH = length of winding

Using the circumference, I calculated that 15 yards of wire was needed, but I was three turns short, so 16 yards is a better estimate. When winding the coil, don't hold the coil form stationary and wind the wire because that puts a twist in each turn and the wire will tangle. Instead, turn the coil form using the thumb to guide the wire and keep it

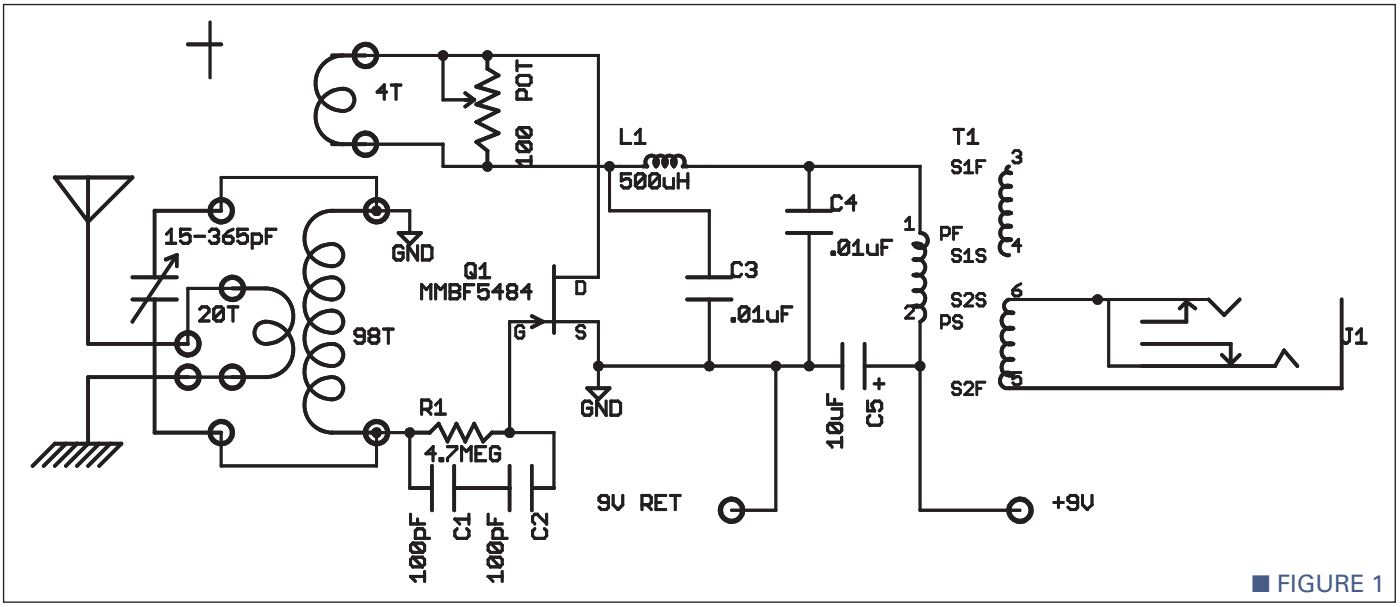

■ FIGURE 1

from unwinding. Punch two holes in the form to anchor the start of the winding and two more 2-1/2 inches up the form for the end of the winding. I used #22 enameled wire in the calculation but used #27 wire to make the coil because I had a lot of it. If I had stretched out the winding to fill 2-1/2 inches, the inductance would have been closer to the calculated value, but because it was mostly close wound, the inductance of my coil was 253 µH. I put the antenna winding over the main coil and held it in place with tape. The feedback winding should be near the ground end. If the receiver does not oscillate, reverse the connections.I had never worked with super regeneration before, so that's why I built the circuit in Figure 1. The theory is that the circuit is a blocking oscillator, which means that once regeneration starts, the transistor is driven into saturation which charges up C1/C2 (I used series 100 pF because I did not have 50 pF on hand). When the transistor saturates, feedback stops and the charge on C1/C2 drives the transistor past cutoff. Regeneration starts again when C1/C2 discharges through R1 and the cycle repeats.

My circuit did not do that; perhaps I should have used a transistor with a sharper cutoff. It still worked, however. I did not have a proper antenna; the antenna should be 50 feet long and as high above the ground as you can get it. You also need an actual ground; the copper water pipe from the street is a good ground, or get a ground rod from the hardware store and drive it in as far as possible. I used a signal generator to test the circuit. With the pot set to zero, there was no signal in the earphone but increasing the resistance brought up the sound until full oscillation occurred — which killed it. Backing off until the oscillation stopped, I found the selectivity to be as good as most AM radios.

L1 filters the RF from the audio output. It might work just as well without it; experiment if you like. I could not find an audio transformer so I used a small 120V/15V power transformer; it should at least have good bass response. I used a stereo output jack, wired for mono. The parts list is shown in Figure 2.

REGENERATIVE RECEIVER PARTS LIST

■ FIGURE 2

PART	DESCRIPTION	P/N	SUPPLIER
■ Coil	See schematic and text		
■ Tuning cap	15 - 365 pF	BC14400	
	Tuning cap source:	**www.oselectronics.com/ose_p96.htm**	
■ R1	4.7M, 1/8W, 5%	299-4.7M-RC	Mouser
■ POT	100 ohms	PW5B100	Jameco
■ Q1	2N5484	512-2N5484	Mouser
■ L1	500 µH	542-70F504-RC	Mouser
■ C1/C2	51 pF, 50V, 5%	81-RPE5C1H510J2P1Z03	Mouser
■ C3, C4	0.01 µF, 50V, 10%	581-5WH103MACJI	Mouser
■ C5	10 µF, 16V, radial	581-TAP106K016SCS	Mouser
■ Transformer	115V/10V, 1.1VA	838-3FS-210	Mouser
■ J1	3.5 mm stereo jack	161-3402-E	

OP-AMP OUTPUT IMPEDANCE

Q I have some older audio generators (Halcyon 701 and 704) that give the transmit and receive levels in dB, which is great for the type of work I do — checking filter losses, pre-amp gains, etc. Because the 701 test sets were originally designed for the telephone company, their output impedance is 600 ohms. So, if you put a load on it lower than 600 ohms, the output levels drop accordingly, but the output meter doesn't change (which tells me the output meter is probably getting its reading before the final output stage). I occasionally need to drive 150 ohm loads and still know what level I am sending. My first thought was to buffer the output using a good quality op-amp set to unity gain, but I have been unable to find any op-amp that has an output Z of 150 ohms. It seems there are about 10 zillion op-amps available, but I can't find any that have an output Z below 500 ohms. Bottom line — do you know of any op-amp that has a low output Z or do you know of any other device that would accomplish what I am trying to do? The generator is 50 Hz to 20 kHz, +12 dB, low distortion, and sine wave only.

By the way, your Q&A column in

■ FIGURE 3

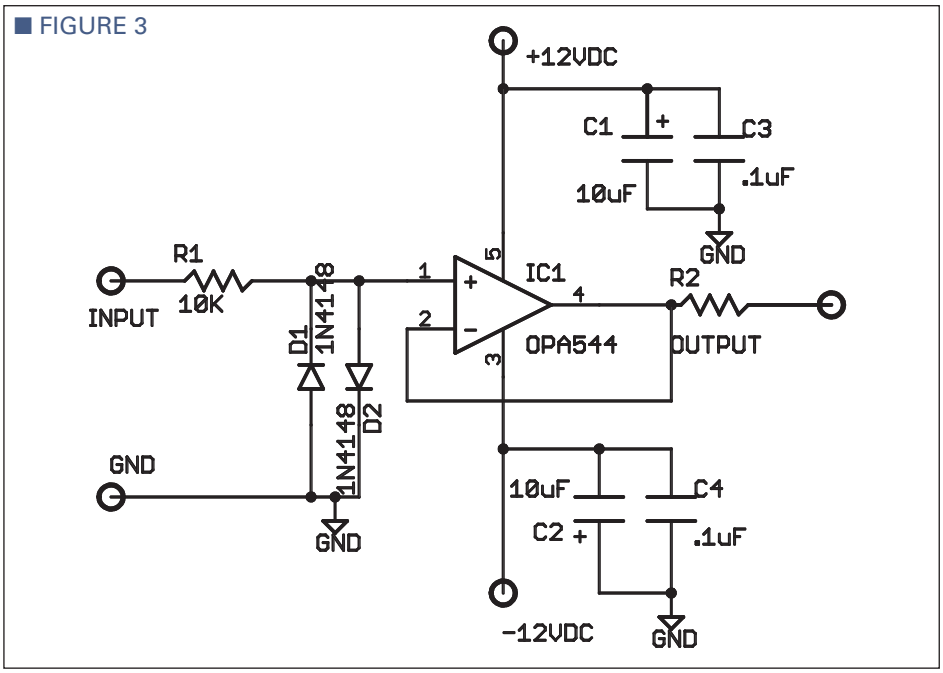

Nuts & Volts is the first place I turn to when a new copy arrives. I enjoy your ideas and insight and have used and adapted many of your circuits.

Thanks for any assistance you might be able to give me.

— Gary Casper

A Since the output meter does not vary with load, it must be calibrated for 600 ohms load. The open circuit output (Eg) is two times (+6 dB) the meter reading. The output (Eo) for any other load (Rl) can be calculated: Eo=Eg*Rl/(Rl+600) where Eo and Eg are in volts, not dB.

When the op-amp is connected as a non-inverting, unity gain buffer, the output impedance is reduced by the open loop gain. With a gain of 90 dB and 500 ohms output impedance, the closed loop output is .015 ohm and can be neglected. Just add the desired resistance at the op-amp output to match the filter (see Figure 3). As long as the load is matched, the meter will read correctly.

The OPA544 op-amp would be a good choice for the buffer. It can supply full output to 100 kHz, has a max DC offset of 5 mV, and can drive a one ohm load at the levels you are using. A power supply of ±12 volts is needed, with output current of 30 mA minimum at a 150 ohm load.

The diodes and 10K resistor at the op-amp input in Figure 3 are for static protection. The input impedance is very high and sensitive to static damage.

DIGITAL RADIO AND TV QUESTIONS

Q Very soon, the digital world will affect television, and now affects radio entertainment. I have questions on converters for presently-owned RF devices.

1) Does this affect AM, FM, or TV only?

2) Can we build them?

3) Can we find a source for kits, or completed converters?

4) What is the practicality of self-conversion, compared to junking our stuff and buying the completed commercial products?

5) What are the band spectrums now, compared to the conversion?

6) Is there a block diagram that simply explains the application to radio or TV, or telephone?

— Bob Stoddard

A 1) Only TV requires a converter. The hybrid digital system works with the analog receivers. I expect this system will remain in place for 20 years or so, until most analog receivers have been replaced.

2) There is no law to prevent building your own; you just have to have a design and the expertise.

3) I don't believe there are any kits available. You can get two coupons worth about $40 from the government toward converter boxes which is about half the cost. Your local electronics store will be able to tell you how to make the application.

4) Converting an analog TV to digital is not practical because the entire design should be focused on the digital parameters. The converter box is a complete receiver, lacking

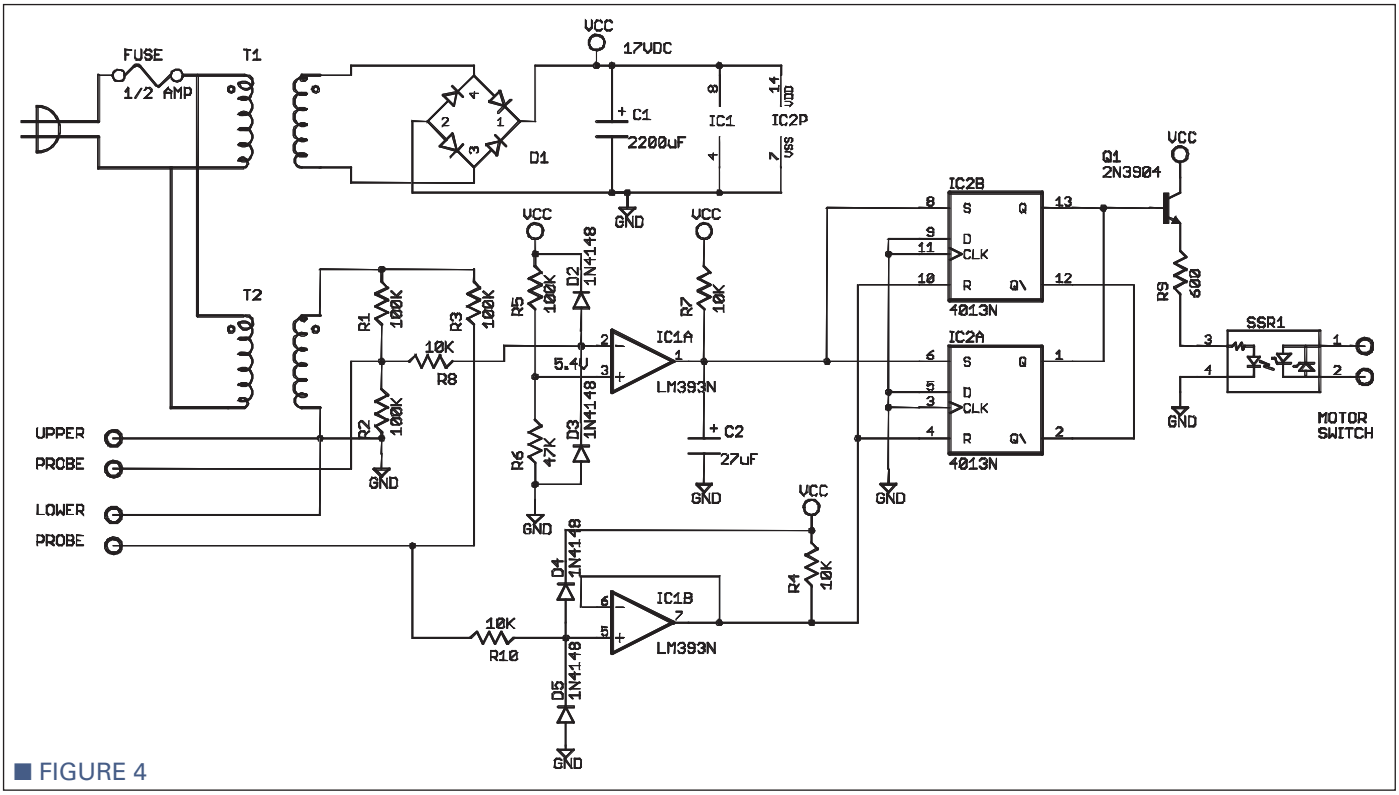

■ FIGURE 4

only the display electronics.

5) The present analog TV channel, which handles one TV signal, can handle up to three digital TV signals.

6) If there is a simple explanation, I have not found it. I don't understand — thinking in analog terms — how a digital signal can take up less bandwidth. I asked my grandson about it and he said: "Think of it in terms of time division multiplex." Aha! That may be a clue, but I still don't understand.

AUTOMATIC SUMP PUMP CONTROL CIRCUIT

Q I have a sump pump to pump out any water accumulating in the sump pit of my cellar during the spring time. Using two probes for high and low water level, do you have a circuit available to automatically turn the sump pump on and off? The pump operates on 120 VAC.

— Jerry Krupka

A I think the old float and switch system works well, but Figure 4 is my electronic solution to your problem. I used AC on the probes because DC might cause cumulative electrolysis that would degrade the sensitivity. I did not build or simulate the circuit, but I did verify that dipping the probes in water will drop the voltage below the thresholds.

Some of the design parameters (for those who want to critique it) are: The value of C1 was determined by estimating the load current to be 20 mA, setting the ripple voltage at 100 mV, and using 8 ms for the time between pulses. The equation is: C = I * dT/dV = 1,600 µF; 2,200 µF is a standard value. The resistors R8, R10, and diodes D2 through D5 are for static protection of the comparator inputs.

As long as the upper probes are out of the water, the signal exceeds the 5.4 volt threshold and causes IC1A to continually discharge C2. When the probes are submerged, the signal drops below the threshold, allowing C2 to charge and set the flip-flop, which turns on Q1 and starts the motor. The motor continues to run until the lower probe is out of the water, causing the signal to increase above the reset threshold of the flip-flop. The reset threshold is approximately VCC/2.

The two flip-flops in the CD4013 are connected in parallel in order to give more drive to Q1. The solid-state relay requires 6.5 mA to turn on, so R9 is sized to provide approximately 10 mA input. The relay is rated 16 amps max and should handle up to 1/2 horsepower. Figure 5 shows the Parts List.

TOUCH PROBE MODIFICATION

Q I have another little circuit modification for you, if you are up to it. I use a touch probe on my milling machine to locate the edge of the material and to find the center of holes. The probe has a set of normally closed contacts that open when its tip touches something.

I would like to install an LED on the probe that would come on when the contacts open. I tried just putting an LED and current resistor across the contacts, but the load of the LED is enough to act like the contacts are still closed. We need something that turns the LED on when the contacts open, but doesn't load the circuit to the point that the mill still thinks the contacts are closed. The probe circuit is powered with 5 VDC.

I also have 12 VDC available, if required, for additional circuitry.

— Bill Blackburn

A What is needed is a MOSFET switch (see Figure 6). The switch contacts — when open — must be greater than two volts but not more than 20 volts. R1 is just for protection against static discharge. I chose the TN2106 because it is available in either TO-92 (thru hole) or SOT-23 (surface-mount). The Mouser part numbers are: 689-TN2106N3-G (TO-92); 689-TN2106K1-G (SOT-23).

DC TO DC REGULATOR

Q I have a 24 volt DC input and I need to have 0-15 volts DC output at 0 to 6 amps. Any suggestions would be most welcome in controlling this circuit. I don't want to use resistors and a potentiometer because this has a variable load on the output.

— T.J. Madden

A A linear regulator would require a massive heatsink, so a switching regulator is the way to go. In the circuit of Figure 7, I have simulated the L1 circuit and have used the 556 PWM circuit before, so I am confident that it works. L1 is continuously conducting, so current spikes in the filter caps are minimized. The power dissipation in Q2 is

SUMP PUMP CONTROLLER PARTS LIST

■ FIGURE 5

PART	DESCRIPTION	P/N
■ T1, T2	120/12 VAC, 1VA	41PG006
■ D1	Bridge rect. 50V, 1A	583-DB101
■ C1	2200 µF, 25V, radial	647-UPW1E222MHD6
■ IC1	LM393 comparator	512-LM393N
■ IC2	Dual D FF, CD4013BE	595-CD4013BE
■ Q1, Q2	NPN, 40V, 2N3904	863-2N3904RLRPG
■ R1-R5	100K, 5%, 1/4W	271-100K-RC
■ R6	47K, 5%, 1/4W	271-47K-RC
■ R7, R8	10K, 5%, 1/4W	271- 10K-RC
■ R9	600 ohms, 5%, 1/4W	271-604-RC
■ SS Relay	240 VAC, 16 amps	881-LS24D16C-HS1
■ C2, C3	27 µF, 50V, 20%	647-UPW1H270MDD

■ FIGURE 6

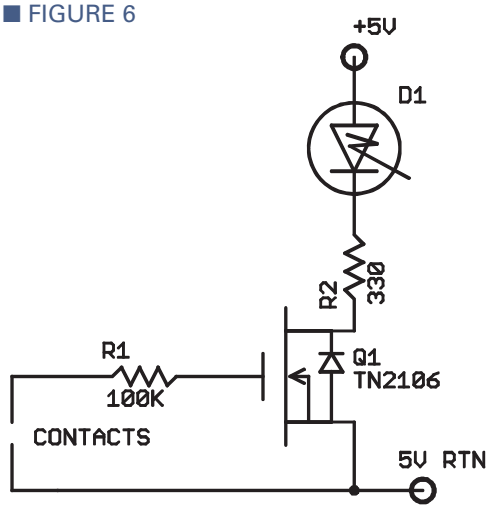

calculated from R_{ON}*I_{LOAD} = .12*6 = 0.72 watts. Add switching losses and it is up to one watt. The thermal resistance of Q2 with no heatsink is 62.5 deg C/W. That will be too hot to hold and too hot for reliability, so put a heatsink on it. The heatsink in the parts list (Figure 8) has a rating of 7 deg C/W, so should be adequate. The diode, D1, should also be on the heatsink because switching losses will heat it. If the efficiency is 90 percent, the loss at maximum output is 10 watts, which will cause a 70 degree C rise at the heatsink, so it should have a fan on it.

IC1B is a free running astable; it sets the frequency and triggers IC1A. R3 is just to make the trigger pulse wide enough to be seen on a scope. R4, the timing resistor for IC1A, is smaller than R2 + R3 to insure that IC1A times out before the next trigger pulse comes along. The pot, R3, allows the duty cycle to be adjusted to 90% max. The frequency is tweaked to be 100 kHz; about as fast as the 556 can drive Q2. When triggered, IC1A produces a pulse whose width is dependent on the voltage on pin 3. Lower voltage produces a narrower pulse. The pulse can go close to zero width but with no load, it is not really stable. You can kill the output by grounding the "enable" port, if that is useful for you.

When you are in the testing phase, leave Q2 out while measuring the voltages and adjusting R3. After installing Q2, you can adjust R9 and R7 for 15 volts maximum output.

The filter caps — C3 and C4 — were chosen based on their ripple current rating and ESR (equivalent series resistance). The voltage ripple would be satisfactory with much less than 660 µF. The ESR of the output filter caps is 0.19 ohms, but with two in parallel and one amp ripple current, the ripple voltage is still 100 millivolts.

Many of the parts listed in Figure 8 are surface-mount, but you can substitute thru-hole parts where available. The only part that is not available as thru-hole is the MAX1680, but you can substitute the TC7660; leave pins 1 and 6 open and short out R8. **NV**

PWM POWER SUPPLY PARTS LIST

■ FIGURE 8

PART	DESCRIPTION	P/N
■ R1, R4	12.1K, 1%, 1/8W	290-12.1K-RC
■ R2	5.49K, 1%, 1/8W	290-5.49K-RC
■ R3	5K pot, 3 mm, SMD	652-TC33X-2-502E
■ R5	10K, 1%, 1/8W	290-10K-RC
■ R6*	270 ohms, 5%, 3W	283-270-RC
■ R7*	100K POT, 9 mm, snap-in	317-2090F-100K
■ R8	13.3K, 1%, 1/8W	290-13.3K-RC
■ R9	20K pot, 3 mm, SMD	652-TC33X-2-203E
■ C1, C2	0.1 µF, 50V, X7R	140-CC502B104K-RC
■ C3-4, C11, C12*	330 µF, 25V, 10%	140-ESRL25V330-RC
■ C5, C6	470 pF, 5%, NPO	80-C315C471J1G
■ C7-C10	10 µF, 16V, tantalum	581-TPSB106K016R0800
■ IC1*	12 volt reg, 7812	512-MC7812AECT
■ IC2*	LM556 dual timer	511-NE556
■ IC3*	Five volt reg, 7805	511-L7805ACV
■ IC4	MAX1680, inverter	881856 (Jameco)
■ IC5	LM393 comparator	511-LM393DT
■ Q1*	NMOS, 50V, 2A, TO-220	844-IRF510PBFI
■ Q2*	PMOS, 30V, 15A, TO-220	512-FQP17P06_Q
■ D2*	Schottky, 10A, 50V	844-10CTQ150PBF
■ L1*	50 µH, 10A	70-IH15BQ500K

* Denotes thru-hole part, otherwise is surface-mount.
NOTE: All parts are from Mouser unless otherwise noted.

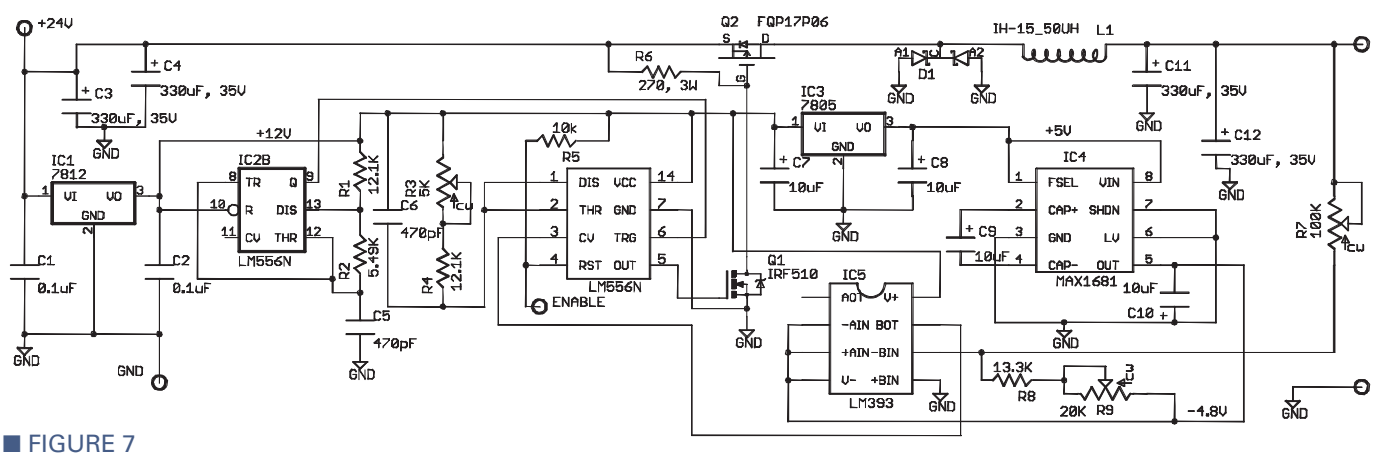

■ FIGURE 7

POPULAR KITS

These are some of our most popular kits and there is something for eveyone. They are designed for ease of construction and robust reliability. All of our kits are supplied with quality fibreglass PCBs, board components and clear English instruction. Jaycar kits can be built with confidence.

Full Function Smart Card Reader / Programmer Kit

KC-5361 $34.95 + postage & packing

Program both the microcontroller and EEPROM in ISO-7816 compliant Gold, Silver and Emerald wafer cards. Powered by 9-12 VDC wall adaptor or a 9V battery. Kit supplied with PCB, wafer card socket and all electronic components. PCB measures: 141 x 101mm

Audio Playback Adaptor for CD-ROM Drives

KC-5459 $37.75 + post & packing

Put those old CD-ROM drives to good use as CD players using this nifty adaptor kit. The adaptor accepts signals from common TV remote controls and operates the audio functions of the drive as easily as you would control a normal CD player. Kit features a double sided PCB, pre-programmed micro controller, and IDC connectors for the display panel.

SMS Controller Module

KC-5400 $31.95 + post & packing

This kit will allow you to remotely control up to eight devices and monitor four digital inputs via an old Nokia handset such as the 5110, 6110, 3210, or 3310. Kit supplied with PCB, pre-programmed microcontroller and all electronics components with clear English instructions. Requires a Nokia data cable and handset.

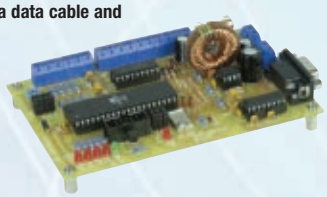

Starship Enterprise Door Sound Emulator

KC-5423 $23.25 + post & packing

FOR ALL YOU TREKKIE FANS!

This easy to build kit emulates the unique sound of a cabin door opening or closing on the Star Ship Enterprise. The sound can be triggered by switch contacts or even fitted to automatic doors. Comes with PCB with overlay, speaker, case and all specified components. 9-12VDC regulated.

Micromitter Stereo FM Transmitter Kit

KC-5341 $34.95 + post & packing

This compact transmitter will connect to your CD or MP3 player and send your music to an FM radio anywhere in your house. Crystal locked to a preselected frequency to eliminate drift. Supplied with revised PCB with solder mask and overlay, case, silk screened lid and all electronic components. Some surface mounting soldering required.

50MHz Frequency Meter Mk II

KC-5440 $40.75 + post & packing

This compact, low cost 50MHZ Frequency Meter is invaluable for servicing and diagnostic work. Kit includes PCB with overlay, enclosure, LCD and all electronic components.

Features include:

- 8 digit reading (LCD)
- Prescaler switch
- Autoranging Hz, kHz or MHz

Starter Projects & Tools

Component Lead Forming Tool

TH-1810 $3.50 + postage & packing

This handy forming tool provides uniform hole spacing from 10 to 38mm. Made in USA from engineering plastic.

- 138mm long

Pin Extractor Press

TH-2014 $5.00 + postage & packing

A handy little pin-extractor/inserter press with a 0.8mm punch. Mainly intended for taking links out of watch bands, but endless other uses for jewellery making, model making and hobbies.

- 2 spare pin punches
- Assortment of 12 pins

Screwdriver Helper

NM-2830 $7.00 + postage & packing

Dramatically increases the amount of torque you can apply to a damaged screw. Just apply a drop or two of Screwdriver Helper to instantly help remove or tighten screws with damaged heads.

Silver Conductive Varnish

NS-3030 $5.50 + postage & packing

Repairs printed circuits, window antennas, window alarm loops etc. Very good conducting properties. Approximately 0.02 - 0.1 ohms/cm².

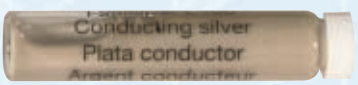

Wire Glue 9ml

NM-2831 $4.50 + postage & packing

A conductive adhesive that enables you to make solder-free connections when you aren't able to solder. Hundreds of hobby, trade and electronics uses. Lead-free, cures overnight.

- 9ml

Coax Seal Tape

NM-2828 $5.00 + postage & packing

This versatile material looks like ordinary PVC electrical tape but is actually a handy sealing system that fuses together to form a removable, waterproof seal once it has been applied. 12mm wide x 1.5m long.

How To Order

Post and Packing Charges

Order Value	Cost	Order Value	Cost
$25 - $49.99	$7.50	$200 - $499.99	$60
$50 - $99.99	$20	$500+	$75
$100 - $199.99	$40		

Max weight 12lb (5kg). Heavier parcels POA.
Minimum order $25.

Note: Products are despatched from Australia, so local customs duty and taxes may apply.

How to order:
Phone: Call Australian Eastern Standard Time Mon-Fri on 1800 784 0263. Fax: +61 2 8832 3118
Email: techstore@jaycar.com
Post: PO Box 107, Rydalmere NSW 2116. Australia
Expect 10-14 days for air parcel delivery

Check out the Jaycar range in your FREE Catalog - logon to
www.jaycar.com/catalog
or check out the range at
www.jaycar.com

1-800-784-0263
(Monday - Friday 09.00 to 17.30 GMT + 10 hours only)
For those who want to write:
PO Box 107, Rydalmere NSW 2116 Sydney AUSTRALIA

Jaycar Electronics

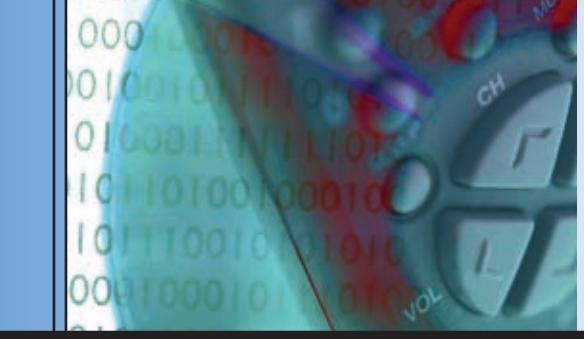

NEW PRODUCTS

- HARDWARE
- SOFTWARE
- GADGETS
- TOOLS

12 GHZ USB SAMPLING OSCILLOSCOPE

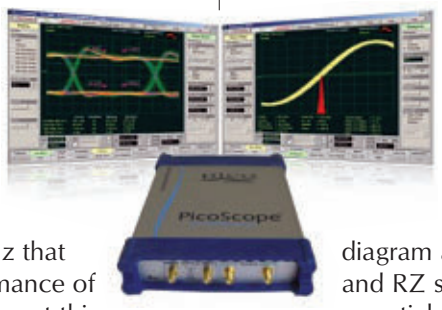

Pico Technology has unveiled the PicoScope 9201, a dual-channel PC sampling oscilloscope with a bandwidth of 12 GHz that redefines the performance of sampling oscilloscopes at this price level.

The dual-channel PicoScope 9201 uses sequential equivalent-time sampling to achieve a sampling rate of 5 TS/s. The wide bandwidth allows acquisition and measurement of fast signals with a transient response of 50 ps or faster. Timebase stability, accuracy, and a sampling interval of 200 fs allow timing characterization of jitter in the most demanding applications. The ability to trigger on high frequencies up to 10 GHz allows measurements on microwave components with extremely fast date rates.

With excellent measurement repeatability, exceptional vertical resolution (16 bits), and fast display update rate, the PicoScope 9201 is a powerful measurement tool for semiconductor testing, TDR characterization of circuit boards, IC packages and cables, and high-speed digital data communications.

Data acquisition and measurement analysis are performed in parallel, enabling the instrument to achieve outstanding measurement throughput. The instruments provide fast acquisition speed up to 200 kS/s and waveform performance analysis with automated direct or statistical measurements on both single-valued signals (sine wave, pulse, impulse) and multi-valued signals (NRZ, RZ). Markers and histograms, math and FFT analysis, color-graded display, parametric limit testing, eye diagrams, and mask template testing can be used independently or in concert.

Accurate eye-diagram analysis for NRZ and RZ signal types is essential for characterizing the quality of electrical and optical transmitters to beyond 7 Gb/s. The PicoScope 9201 was designed specifically for the complex task of analyzing digital communications waveforms. Compliance mask and parametric testing no longer require a complicated sequence of setups and configurations. The important measurements you need are right at your fingertips, including industry-standard mask testing with built-in margin analysis, extinction ratio measurements with improved accuracy and repeatability, automatic eye measurements — crossing %, eye height and width, one and zero levels, jitter, rise, and fall times — and more. In addition, mask testing of SDH/SONET, Fibre Channel, Ethernet, and other standards simplifies compliance testing. A full color display helps you to discriminate waveform details. A color-graded display mode adds a third dimension — sample density — to your signal acquisitions and analysis.

At less than half the price of a traditional bench-top instrument, with its small size (170 x 255 x 40 mm) and light weight (1 kg), the portable PicoScope 9201 offers the widest range of measurements and waveform processing capabilities of any multi-gigahertz PC oscilloscope. It can be connected to the USB port of any Windows laptop or desktop PC.

Alan Tong, Managing Director of Pico Technology, commented: "The PicoScope 9201 really shows the benefit of Pico's approach to test and measurement. We have taken our understanding of low-cost PC oscilloscopes and applied it to a high-end, specialized instrument, and the result is a fully specified sampling scope that's within the budget of most engineering and test departments."

The PicoScope 9201 is available from local distributors, or direct from Pico Technology.

For more information, contact:
Pico Technology
Web: **www.picotech.com**

MAKE SECURING EMBEDDED WEB DEVICES EVEN EASIER

Rabbit has announced an updated version of the Secure Embedded Web Application Kit. The Rabbit® 4000 based kit combines new security sample programs and software tools. Customers can use the kit to implement web and data security easily into their embedded applications. The Secure Embedded Web Application Kit offers a guide for design engineers who are new to the challenges of embedded security, getting them up- to-speed

quickly and developing code for secure web pages and data exchanges.

The updated version of the Secure Embedded Web Application Kit contains an RCM4300 RabbitCore® with a 512 MB miniSD™ card, a prototyping board, accessories, and development tools to get up and running quickly. Along with an industry-proven Dynamic C® integrated development environment – incorporating an editor, compiler, and in-circuit debugger – it is enhanced with support for FAT file systems, for easy data storage, Secure Sockets Layer (SSL)/Transport Security Layer (TLS), and Advanced Encryption Standard (AES) security. The included security application sample programs facilitate the implementation of a solid embedded system that uses the latest SSL/TLS secure data transmission technology. Included with the kit for a limited time is the recently published reference book *Practical Embedded Security*, authored by Tim Stapko, an excellent desktop reference for embedded security projects.

The Secure Embedded Application Kit is priced at US$349.

For more information, contact:
Rabbit
Web: **www.rabbit.com** or **www.digi.com**

UP24B HIGH-RES AIR PRESSURE SENSOR

Ramsey Electronics has released an improved version of their popular UP24 high resolution air pressure/elevation sensor. The new UP24B has all the features of its

READY, SET, GO...
get your dream job!

Be an FCC Licensed Wireless Technician!

Make $100,000 a year with NO college degree

Learn Wireless Communications and get your "FCC Commercial License" with our proven Home-Study Course!

- No need to quit your job or go to school.
- This course is easy, fast and low cost.
- No previous experience needed!
- Learn at home in your spare time!

Move to the front of the employment line in Radio-TV, Communications, Avionics, Radar, Maritime and more… even start your own business!

Send for FREE facts today.

MAIL COUPON TODAY OR CALL TOLL-FREE!

800-932-4268 ext. 209

www.LicenseTraining.com

Send to: COMMAND PRODUCTIONS
Warren Weagant's FCC License Training
P.O. BOX 3000, DEPT. 209 • SAUSALITO, CA 94966
Please rush FREE details immediately!
NAME: _____
ADDRESS: _____
CITY/STATE/ZIP: _____
Or email us: fcc@CommandProductions.com

predecessor plus an improved battery/power/recharging system, data marking feature, and improved setup navigation controls. A lithium polymer cell has replaced the NiMH cells. Recharging may be done via an external 6 to 30 volt DC power source or from a standard USB connection. Power management is automatic. Either of these sources may also be used to power the unit either as a stand-alone source or while charging. Charging status is indicated by two LEDs.

The menu navigation has been upgraded to proximity type "buttons" and the power switch has been streamlined so the UP24B has a smaller profile. The lithium polymer cell has reduced the weight to 8 oz. Over 41KB of Flash memory is available for storage of up to 31 hours of data, depending on the selected sample rate. Twelve data sample rates are available ranging from 0.1 seconds to 15 minutes. A new 'Mark' feature allows marking of

SHOWCASE

Instant LCD

A TFT LCD GUI in your project next week!
From $199 - 2.7" & 5.6" Interfaces to Any Micro
serial - i2c - SPI - flash images & fonts - touch
ezLCD.com

Customer Design
Front Panels
We work with your CAD program
Expert in **Quality**
Expert in **Service**
Expert in **Material**
Expert in **Price**
Please contact us:
info@cam-expert.com
www.cam-expert.com

USB Oscilloscope for $169.50
8+8 digital + 2 analog channels
Oscilloscope - Generator - Logic Analyzer
with UART, SPI, I2C and 1-Wire interfaces
Great for PIC and AVR projects!

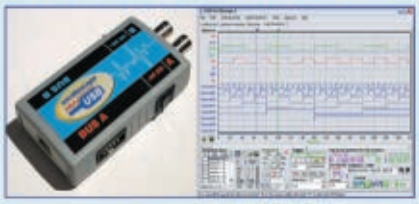

www.HobbyLab.us

5mm White water clear **LED** 3.5V 10,000 mcd (AB287) **$0.56**

20 second voice recorder/playback module. (pre-assembled) (A96010) **$6.60**

The Velleman **Personal Scope** is a complete 10MS/s portable oscilloscope. (HPS10) **$146.**

Thousands more items on our web site!

Electronics123.com
Tel: 1-888-549-3749
102 E. Park Ave, Columbiana OH 44408

www.Primecell.com
Battery rebuilding service
Dead Batteries ? Don't toss them.
Send them to us - our rebuilds are better than original specifications.

Tools
Hilti Skil Milwaukee Panasonic B&D DeWalt Makita All 2-36 Volts

Electronics
Bar Code Scanners
Surveying
Printers
Laptops
Photography

Radios
APELCO UNIDEN G.E. ICOM KENWOOD MOTOROLA MIDLAND MAXON YAESU ALINCO

Visit www.primecell.com for important details
24 Hr Secure recorder tel-fax (814) 623 7000
Quotes email: info@primecell.com
Cunard Assoc. Inc. 9343 US RT 220 Bedford PA 15522

MODEL KE-USB108
Emulate a USB:
* Keyboard
* Mouse
* Joystick

NEW!
-108 individual programmable switch inputs
-Produce long macros from a single input
-Send keystrokes,mouse or joystick actions
-Ideal handling of toggle switches
-2 Rotary Encoder inputs
-Potentiometer inputs for Joystick X,Y,Z

888-690-9080
HAGSTROMELECTRONICS.COM
11 Fiddlers Green, Lansing NY 14882

LITEXPO™ Digital Video Player Board
MMV-100-USB
$129/ea

(monitor & SD Card not included)
BUILD YOUR OWN **E-FRAME**
- Ideal for portable video presentation & slide show
- Plays MPEG 1, 2, 4 video, JPEG image & MP3 on TV or any PC monitor or video monitor
- USB communication interface
- OEM version with optional multi-storage card, button/remote control features

Tel: (847) 202-0010 WWW.LITEXPO.COM

PRINTED CIRCUIT BOARDS
QUALITY PRODUCT
FAST DELIVERY
COMPETITIVE PRICING
* Aluminum Backed PCB
* Single & Double sided
* SMOBC/RoHS
* LPI mask
* Through hole or SMT
* Nickel & Gold Plating
* Routing or scoring
* Electrical Testing
* Artwork or CAD data
* *Fast* quotes
* Flex Circuits

We will beat any competitor's prices!!!

10 pcs (3 days)
1 or 2 layers $249
10 pcs (5 days)
4 layers $695
(up to 30 sq. in. ea.)
includes tooling, artwork, LPI mask & legend

PROTOTYPE THROUGH PRODUCTION
PULSAR, INC
9901 W. Pacific Ave.
Franklin Park, IL 60131
Phone **847.233.0012**
Fax **847.233.0013**

www.pulsar-inc.com · sales@pulsar-inc.com

Solderless LED clock kits
9" x 5" models $25–33. Free shipping!

48+ red or blue LEDs. Price is after $2 off coupon code 'nv9' at http://LEDkit.biz
Big, bright, fun! Includes all materials.
Incl. transformer, panel, stands, instruction book. LEDkit.biz

data in the memory with an external contact closure. The collected data can be downloaded to a PC via a USB connection. The connection can also be used to collect data on a PC in real time using simple commands. Instructions, a sample application with source code, and drivers are available for download. A "Pilot" mode allows setting of an elevation window with high and low alarms. Adjustments for current atmospheric conditions are provided so standard procedures used by aircraft pilots may be used to set current elevation.

Atmospheric pressure resolution is better than 0.0001 kPa and elevation resolution based on pressure is better than 1/3 inch. The UP24B is available as a kit or factory assembled and ready to go.

For more information, contact:
Ramsey Electronics, LLC
Tel: **585-924-4560** or
800-446-2295
Web: **www.ramseykits.com**

SHOWCASE

Coming Soon!
A Social Networking Site for You, the Electronics Enthusiast!
We Need Beta Testers Now Sign Up At:
www.solderbynumbers.com

ActiveWire® USB
Simple USB Interface!

- Works with MacOS 8/9, Win98/2K/ME/XP FreeBSD and Linux!
- 24Mhz CPU core with USB
- Firmware downloadable via USB
- 16 bit parallel Input/Output
- See web-site for add-on boards
- All drivers, manuals, demos are on our web-site for immediate download!

$59 plus shipping
ActiveWire, Inc.
www.activewireinc.com
ph +1.650.465.4000 fax +1.209.391.5060

USB / Ethernet
Data Acquisition & Control

UE9 $439
- Analog & Digital I/O
- Counters, Timers, PWM, SPI, I²C
- Stream input data at 50+ kSamples/s
- Windows, Linux, Mac, Pocket PC, Modbus/TCP
- Operates from -40 to +85 °C

www.LabJack.com
Phone: 303-942-0228

HYDRA
Game Development Kit
Develop Games, Graphics, and Media Applications with the Propeller™ Powered HYDRA Game Console Kit.

Master multicore techniques & programming while having fun!
www.XGAMESTATION.com

QKITS.COM
USB Function Generator 2 MHz

Brand New! # PCGU1000 $259.95
call 1-888-GO 4 KITS or order online at QKITS.com
GREAT PRICES, GREAT SHIPPING RATES

THE SERIAL PORT LIVES!
Everything you need to know about COM ports, USB virtual COM ports, and microcontroller async. serial ports. Interfacing, programming, wireless options too!
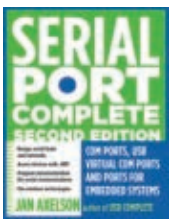

New 2nd Edition
Serial Port Complete
from Jan Axelson, author of *USB Complete*
ISBN 978-1931448062 • 380 pages • $39.95
Lakeview Research LLC **www.Lvr.com**

FLYPCB.com
Nothing is Impossible
YOU DESIGN WE PRODUCE
PCB House from China

- Start from $40
- No Min Order
- Reliable Quality
- Fast Delivery
- Best Service
- www.FLYPCB.com
- Sales@flypcb.com

Printed Circuit Board Design
Schematic Capture, Auto routing, Gerbers.
Using Altium - Protel
Microprocessor Embedded Design
Motorola, Texas Instruments, Atmel, etc.
Prototype and production runs
Fully automated SMT assembly lines.
Plastic Parts
Mold manufacturing. No order to small or too big. Very competitive on high labor parts. For very small orders, we can inject your parts on manual low pressure machines, dramatically reducing the cost of the mold (parts up to 2 oz and up to 5,000 per week).
www.electronicdesignmexico.com

It's a bird,
It's a plane,
It's **Super Cricket!**

the best Logo language microcontroller packed with features You Control! **new*
* 4 DC motors
* 8 servo motors
* 6 sensor inputs
with • IR comms
• beeper • 4-AA power
• bus port expansion
• interactive code dev't
only $99
full start kit $139
USB version $149
gleasonresearch.com 800-265-7727
PO Box 1494 Concord, MA 01742

A DELUXE TEST BENCH VARIAC

BY ROBERT REED

For the last 10 years, I have needed to use a variac for various bench testing. Up until recently, my barebones test setup consisted of a two amp variac, a DMM, and a collection of test/jumper leads. To perform tests in this manner, it was awkward to say the least. Common scenario: Measure the variac's set voltage, connect load, disconnect DMM and change leads for current measurement, reconnect everything, and hook up to load. Then, when any change was needed or performed, it was swapping leads back and forth again. You can imagine that after a while, a "rats nest" of twisted, jumbled meter leads and jumper leads were all over the place — quite annoying!

Then, one evening when I inadvertently connected the wrong end of this test lead to the wrong end of that jumper lead, the whole project went up in smoke! It was at that point I said "enough" and set out to forever correct this messy situation. Since deluxe versions of these variacs can run $500 and up, I just could not afford or justify buying a new one. However, I was sure I could build one a lot cheaper and that's what this article is all about.

For starters, that pile of leads and even the DMM had to go. Also, I wanted more power than my little two amp unit would put out. What I envisioned was the smallest enclosure with the largest practical variac that I could cram into it. I also wanted simultaneous voltage and current metering. One NEMA standard three prong outlet, along with a power on switch, and fused both on the input and output would do the trick. In other words, a moderately small unit that would sit out of the way in a corner of my test bench and yet perform all the functions of my "20 jumper lead" setup.

■ FIGURE 1. Auto-transformer.

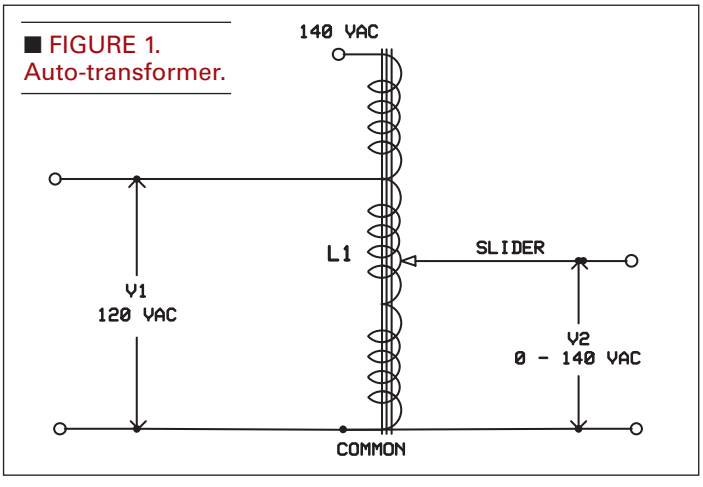

For some of you not familiar with these devices, you may be asking 'what is a variac and why would I want one?' A variac (as used in this article) is a single winding transformer — more properly known as an auto-transformer — with a movable tap or slider to vary the output voltage as opposed to a fixed input voltage. These devices (which have been around for over 70 years) look like something right out of Thomas Edison's laboratory. They have remained virtually unchanged in all that time which gives testimony to their simplicity and ruggedness of design. The unit is shown schematically in Figure 1 and pictorially in Figure 2. The input (V1) at usually 120 VAC impresses a voltage across the single total winding of L1. The coil will reach a potential of 140 VAC at its upper end. This is because the coil is wound on a common core

– a hollow iron cylinder with a flatted area of bare exposed wire on the top surface called the commutator. The slider is a spring-loaded carbon brush attached to a central shaft, and when rotated around this commutator, picks off a variable output voltage (V2) of 0 to 140 volts. This action is almost identical to the mechanics of a standard potentiometer.

The position of the slider now forms a transformer which – for all practical purposes – follows all the rules of an isolation transformer: volts x amps in equals volts x amps out. In other words, the "secondary" step up/step down voltage will always be rated at a current (up to the maximum name plate rating) that produces the same wattage as the rated incoming "primary" wattage.

The term "VARIAC" (VARIable AC) was coined by the General Radio Corp. back in the 1930s and although they no longer manufacture these devices, the name stuck and is synonymous even today with a variable auto-transformer. Today, Superior Electric and Staco, Inc., make most of these devices. Superior's trademark is the "PowerStat." The PowerStat has become as popular as the variac when identifying these devices and is used interchangeably when referring to variable auto-transformers.

Although you probably won't use one of these as much as more common test equipment (such as a DMM), when the need arises, they are indispensable. I've used my variac for transformer testing, initial power-up of new power supply designs, regulator vs. line voltage tests, as various AC voltage sources, and all the way up to power tool testing. But that only touches the tip of the iceberg, and I could go on and on about its uses. Initially, when designing this unit, I decided that a 10 amp variac would be the best compromise between power and manageable size of the finished product.

This has proven to be a good choice over the last couple years since I built it, as I have used it for testing low milliamp devices all the way up to three horsepower woodworking routers (speed control design). Even though the name plate rating is 10 amps, it can put out considerably more current for short time intervals (10-15 minutes). I have driven 15+ amp devices for time periods such as that. It all comes down to duty cycle and starting with a cold core, then adequate cooling time between these high current runs.

Construction

To start off this project, the first item to purchase is a bare bones variac unit (no case or accessories). Of course, eBay was the place to look for one. The unit I chose was a Staco #1010. They just seem to have a steady stream of these for sale. The average selling price of these units ranges between $35 to $55. As it was, I got mine for $25 and the seller even threw in a small 1.75 amp unit. Figure 2 is typical of these 10 amp units. The type with it sitting on its front face with the dial plate removed is what you want to look for. You can always 'Google' for exact model information, including detailed mechanical drawings plus a ton of general information. Now that the most expensive part is out of the way, the next step is to locate an enclosure to house this unit, a couple of digital panel meters, circuit board, power supply, and various hardware.

Fortunately, I had a metal box out in the garage that – with the right shoehorn – I could cram all the parts into (I have a habit of filling a 5 lb bag with 10 lbs of parts). I needed to make a vented back panel, so I used some scrap Bakelite sheeting I had and then I fashioned a 1/8' aluminum front panel that was adequate to hold the weight of the variac. I screwed on a handle and some bumper feet that I scrounged from my junk box and I was all set. I gave it a fresh coat of paint then picked up the rest of the hardware and associated panel meters that I needed. Since I knew the internal circuit board and its power supply board would be quite small, I just allowed about 10-12 cubic inches of space to fit those in later.

The box I used measures 9" wide x 6" high x 5" deep. Do not go any smaller than this if you use a 10 amp variac. In fact, bigger is better. Of course, if you use a smaller variac, just reduce the enclosure accordingly. Once you have all the major components set out in front of you on your workbench, you can then best determine your layout and enclosure size. Remember, nothing is engraved in stone here, so as I describe how I constructed my unit, I'll offer a few options along the way.

Referring to Figures 2 and 3, notice the four ears slightly protruding at the front end (dial knob end). Lay these holes out and transfer their locations to the front panel. Machine them and then mount the variac with four #10 x 1" bolts. In my unit, the variac terminal board was very close to the bottom of the box when installed (1/4"). I wasn't comfortable with this small clearance, so I cut a piece of Formica laminate and glued it to the bottom of

■ FIGURE 2. Bare bones variac.

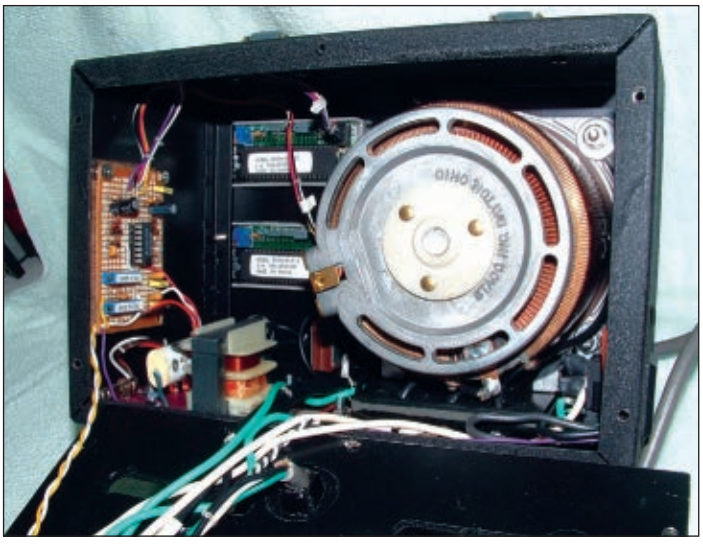

■ FIGURE 3. Internals.

the box. This extra length also gave protection to the low voltage power supply (located at the lower left in Figure 3). I then laid out and machined openings for the fuse, power switch, and panel meters, which required rectangular holes (approx 1" x 3").

For any particular panel meter, first scribe out required rectangular openings on the front panel and then "hog" out as much material as you can with a large drill bit. Then clamp in a vise and clean up the rest with a file. By clamping a straight piece of wood in with it and lining it up with the layout line, you give yourself a nice filing guide. Better yet, use a hand nibbler tool. I have used one of these and for the price, it's not a bad deal. I've included a part number for this in the Parts List.

The low voltage power supply is simple, and should remain trouble-free for a long time. There's a technique I use that I've become fond of lately. Construct this on a piece of Formica laminate of the proper size (2-3/4" x 2" for mine). Lay out where the components will be and drill 1/16" or smaller holes for their leads. Push them through and connect the pigtail leads point-to-point and solder them up. Use solid #22 insulated wire for crossovers or longer runs. Epoxy the transformer in place and connect it up.

The whole assembly is mounted with two 6-32 bolts that are inserted through the drilled holes in the bottom of the box and the previously glued laminate on the inside bottom of the box. Nut these down to help hold the insulator in place (these nuts will also serve as board standoffs). Next, drop the board with matching holes onto these protruding screws and nut it down. I actually drilled these holes all at the same time by clamping all three pieces together in proper alignment and then drilling. (This was all done prior to the board component mounting, of course.) I like this method because it is cheap and simple,

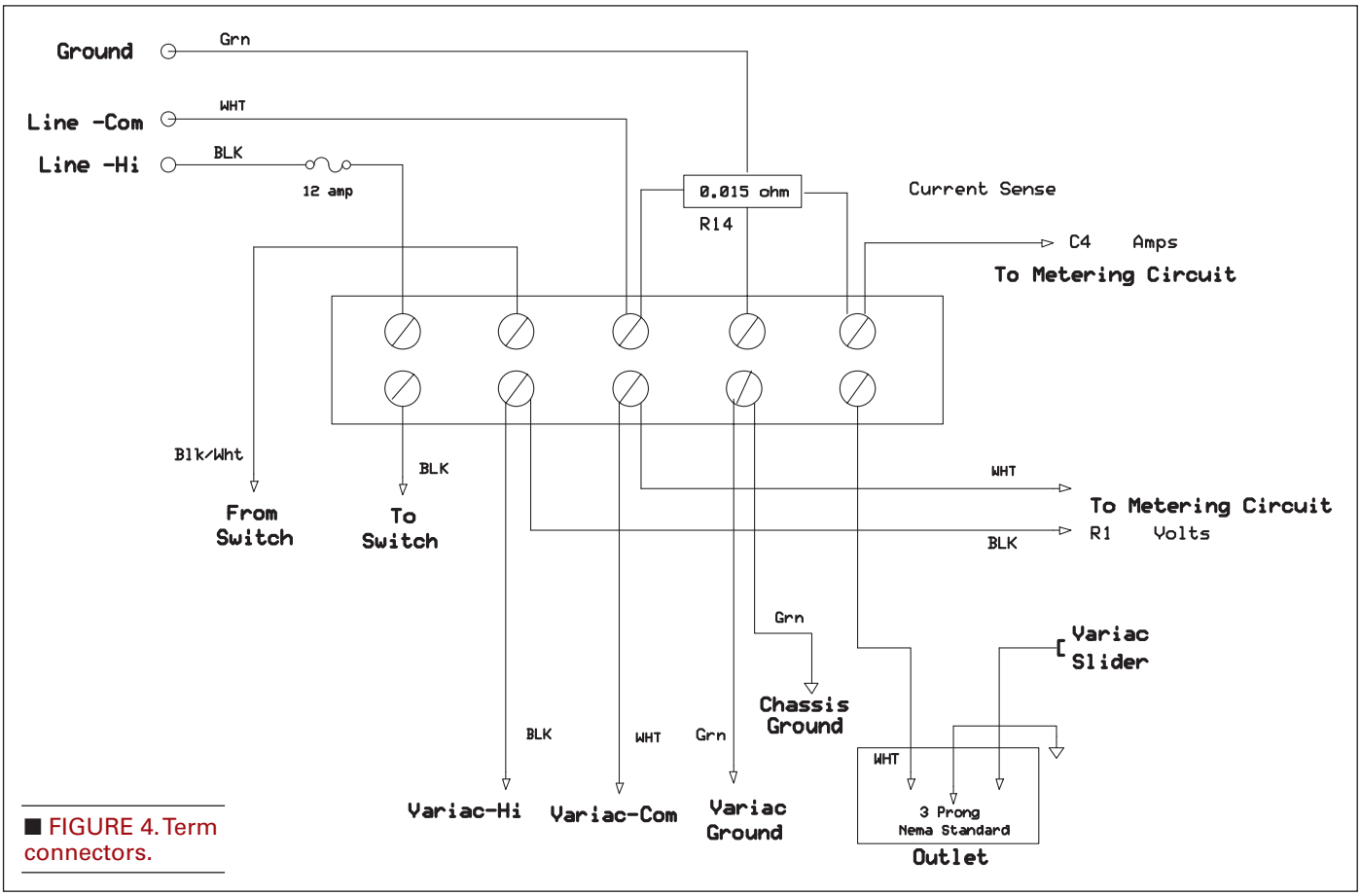

■ FIGURE 4. Term connectors.

and looks attractive from the top side. The bottom side is pure ugliness, but is totally hidden from view when sandwiched in this fashion.

I use plated perfboard for any other types of circuits due to the number of holes required and the fact that removal/replacement may be frequent for debugging or circuit revisions.

Figure 3 gives a pretty good picture of the overall mounting of the major parts players the variac (right side); low voltage supply(lower left); metering circuit board (left wall); and the panel meters (left front). There is one item that is mounted on the back cover and just out of sight in Figure 3 — a five screw terminal block to serve as a convenient connection point for all AC wiring and also the current sense resistor R14. The wiring on this block is shown in Figure 4.

The metering board is a 1-3/4" x 2-3/4" plated perfboard from RadioShack that accepts DIP sockets nicely. This is installed in such a way that the volts and amps calibration pots (P1 and P2) are accessible when the back cover is removed. You could drill 3/8" holes in the back cover to avoid cover removal when calibrating.

Connecting leads were run out of one end of the board to the power supply board, to supply the required DC voltages. From the other end of the board, I ran two sets of four wires each to connect up with the panel meters. These were terminated in four pin SIP sockets and mated perfectly to the DPM's input/power header. The only other components to install were a standard three-prong socket on the lower right hand wall of the box (as viewed from behind), the power cord, and an input fuse holder on the rear panel.

Theory of Operation

Figure 5 shows the low voltage power supplies and the variac wiring. The pos/neg 6.8 VDC supplies are derived through C12 directly from the 120 VAC line; this cap drops most of the input voltage. Half wave rectification is adequate here due to plenty of headroom for filtering and zenering by C13,C14 and Z1,Z2. These supplies will handle a moderate range of current for different op-amp circuits, as will be explained later. The positive 5 VDC DPM's supply is derived from T1, which has dual 9 VAC secondaries. I had to parallel these to get the current needed for my DPMs, which are LED readouts and require about 120 milliamps of current. (I chose these for the large display digits and low price.) Again, half wave rectification works here due to the plentiful headroom available. If one were to use LCD readouts, then one of the 9 VAC secondaries could be freed up and used in place of C12.

On the metering board (shown in Figure 6), the variac output voltage is monitored and brought in via a #22 wire connected to R1 at that point. Be aware that this point is electrically hot and can reach 140 VAC. I put a dab

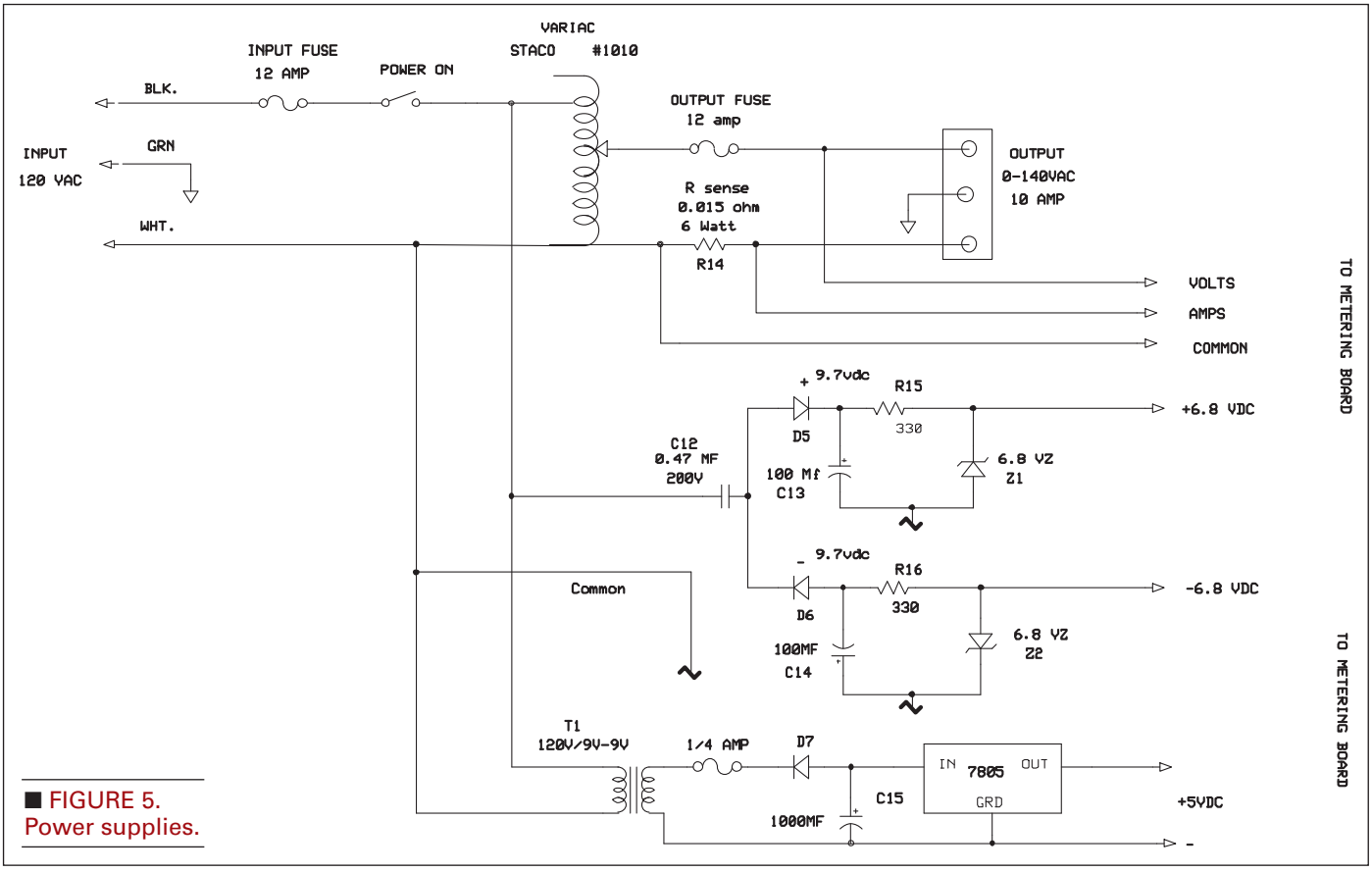

■ FIGURE 5. Power supplies.

of silicone compound on it for added protection. R1 and calibration pot P1 divide this voltage down to a manageable value for the following circuit to handle. U1A buffers the voltage and feeds U1B, which is an ideal half wave rectifier circuit. It gives perfect linearity from several millivolts on up, due to the rectifier being enclosed in the op-amp feedback path. C2 filters this output peak voltage to a flat DC for the DVM. R5,R6 scale this voltage for the meter's 200.0 millivolt range. It goes something like this: 120.0 VAC in at R1; 2.5 VDC at the C2,R5 junction; 120 millivolts DC at the R5,R6 junction; and 120.0 volts on the DVM display.

You may be wondering why in both this circuit and the following amps circuit section their rectifier inputs are so high when we only need millivolts to drive the meters. Two reasons: Even though these are "perfect" rectifier circuits, more input drive increases their low end linearity. The other reason is that the subsequent divider (R5,R6) also divides and reduces any inherent DC offset voltage in the op-amp's output and practically eliminates the need for any additional circuitry for that purpose. P1 — the volts calibration pot — not only calibrates the meter, but compensates for all the errors and tolerances in this circuit. Overall expected accuracy will be about ±1%.

The variac output current flows through R14 (this is actually two 0.03 ohm resistors in parallel) and develops a small AC voltage across it. This voltage is monitored and brought into the metering board and lands at R7. It is then amplified by U1C to a suitable level to drive U1D, which again is an ideal half wave rectifier circuit. The DC voltage at the C5,R12 junction and subsequent scaling at the R12,R13 junction are similar to the voltage metering circuit at its respective points. As far as the DPM meters go, just make sure its jumpers are correctly set for decimal point location and 200 millivolt operation.

However, if you choose a meter with a different range, you will have to adjust the values of R12,R13 and R5,R6 for correct scaling. The ammeter's reading will drop off somewhat in accuracy below 50 milliamps, but

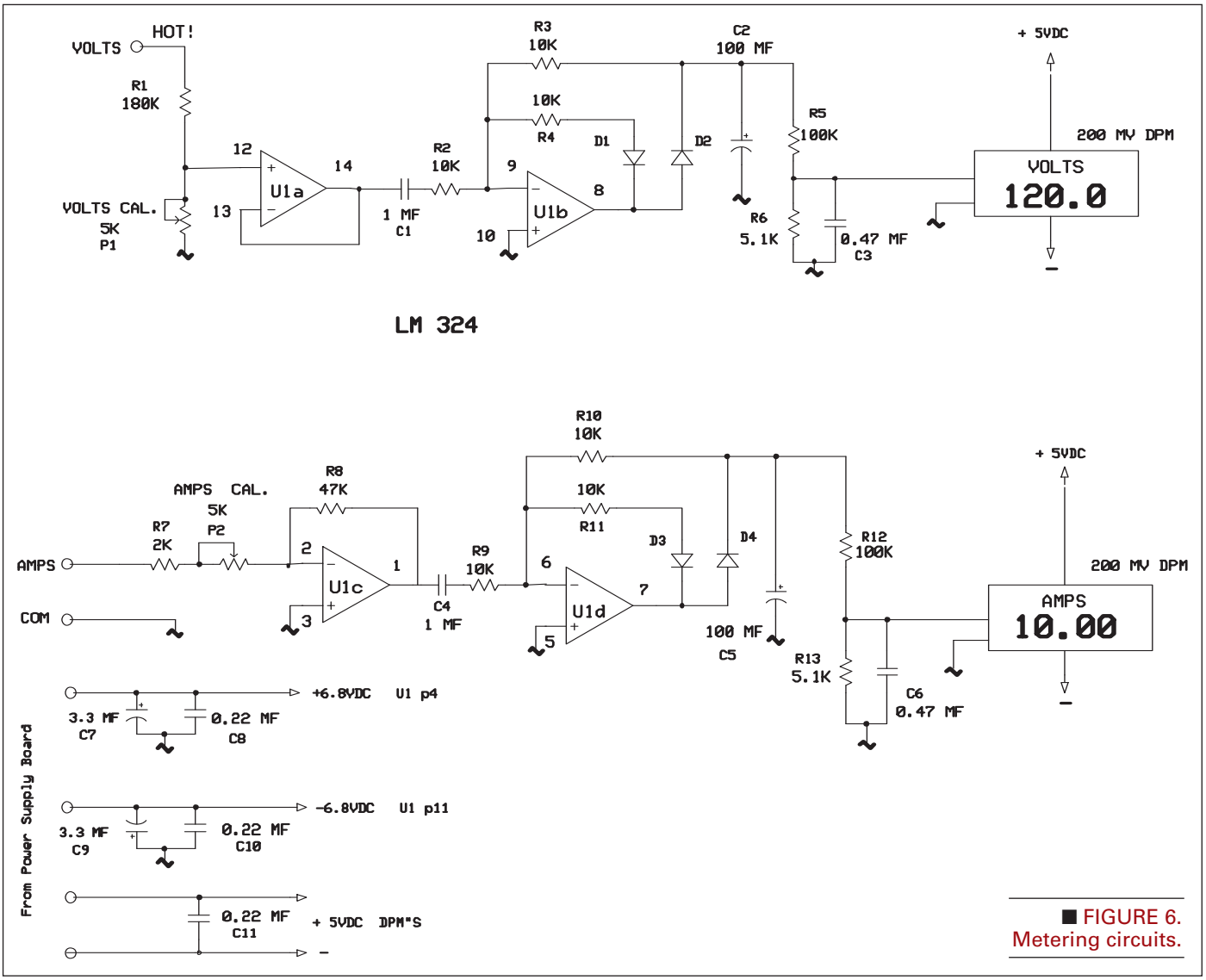

■ FIGURE 6. Metering circuits.

PARTS LIST

ITEM	DESCRIPTION
❑ R1,R5,R12	100K
❑ R2-R4,R9-R11	10K
❑ R6,R13	5.1K
❑ R7	2K
❑ R8	47K
❑ R14	0.03 ohm / 3 watt (two required) Mouser #66-LOB5R030J
❑ R15,R16	330 ohm
❑ C1	1 µF / 10% ceramic
❑ C2,C5	100 µF 16 V
❑ C3,C6,C12	0.47 µF
❑ C4	1 µF 10% ceramic
❑ C7,C9	3.3 µF 16V
❑ C8,C10,C11	0.22 µF
❑ C13,C14	100 µF 25V
❑ C15	1000 µF 25V
❑ D1-D4	1N914
❑ D5-D7	1N4002
❑ Z1,Z2	6.8V zener
❑ P1,P2	5K 10 turn pot
❑ T1	120V-9V / 9V transformer Mouser #838-SB2812-1218
❑ U1	LM324
❑ DPMs	200 mV DC RSR LED panel meter #DM3A from: ELECTRONIX EXPRESS (**www.elexp.com**)
❑ Variac Output Socket	Mouser #693-4300.0701 (**www.mouser.com**)
❑ Variac (mine)	STACO #10-10 (10 amp, 120 VAC in, 0-140 VAC out) This may be whatever brand or size you prefer.

in general, it is not much worse than the meter's normal resolution at these levels, so it's a moot point.

One word of caution here: In regards to the metering circuits I chose for this project, these are half wave rectifiers in which their peak reading is converted to pure DC for metering. These circuits will lose accuracy for non-symmetrical AC waveform cycles. Keep this in mind when making measurements on equipment that would alter the 60 cycle waveform. The good news is that this doesn't happen too often.

A more accurate solution would be to use an ideal full wave rectifier circuit or an absolute value circuit in place of the half wave circuitry I chose. I found that the time constant of the required filtering slowed the tracking response down greatly when I used one of those circuits instead.

This makes voltage adjustment very annoying as you would have to creep the voltage control along very slowly in order for the voltage to settle to a stable enough reading for the DPMs to read it. This would not have presented as big a problem if I had used analog meters instead of digital ones as they tend to average outfluctuations for a more stable display. If one were to insist on "all situations accuracy," those circuits are easily found in most op-amp books or even in a focused Google search.

As I mentioned earlier, nothing is engraved in stone in this article, so feel free to upsize, downsize, alter circuits to better suit your purpose, or build it exactly the way I did. No matter what you end up with, I am sure you will enjoy using it as much as I've enjoyed using mine.

As a closing note, I built this unit for just under $65 and some minor parts from my junkbox — a far cry from the $500 and up for a new commercial unit!

Also, one item I have recently added to the variac test setup is a 700 VA line isolation transformer (another steal from eBay). Aside from the safety aspect in some situations, it really improves oscilloscope presentations by eliminating a lot of low level noise and garbage since the scope now has a true common ground to the circuit under test. **NV**

Full Speed

It writes your USB Code!

NEW! **HIDmaker FS for Full Speed FLASH PIC18F4550**

Creates complete PC and Peripheral programs that talk to each other over USB. Ready to compile and run!

- *Large data Reports*
- *64,000 bytes/sec per Interface*
- *Easily creates devices with multiple Interfaces, even multiple Identities!*
- *Automatically does MULTITASKING*
- *Makes standard or special USB HID devices*

NEW! "Developers Guide for USB HID Peripherals" shows you how to make devices for special requirements.

Both PC and Peripheral programs *understand your data items* (even odd sized ones), and give you convenient variables to handle them.

PIC18F Compilers: PICBASIC Pro, MPASM, C18, Hi-Tech C.

PIC16C Compilers: PICBASIC Pro, MPASM, Hi-Tech C, CCS C.

PC Compilers: Delphi, C++ Builder, Visual Basic 6.

HIDmaker FS Combo: Only $599.95

Trace SYSTEMS, Inc.

DOWNLOAD the HIDmaker FS Test Drive today!

www.TraceSystemsInc.com

301-262-0300

BUILD A SWITCHING REGULATOR

BY JIM STEWART

We're all familiar with linear IC regulators, especially the three-pin TO-220 package types like the 7805 and the LM317. They're inexpensive, and their low-noise and fast transient response make them ideal for many applications. Their one drawback is efficiency. For example, a 7805 regulator delivering one amp from an input of 12 volts will dissipate seven watts of heat while delivering five watts to the load. Plus, a large heatsink would be required to keep it cool enough to operate.

When efficiency is important — as with battery-operated designs — we have the option of using a switching regulator. In fact, most modern equipment uses switch-mode design in the form of off-line power supplies and switching regulators. But many hobbyists I know shy away from switchers. Using an older controller IC like the LM3524 requires a fair amount of design, as well as an external switching transistor. Then there's the requirement for an inductor. How do you choose the right one, and where can you get them?

Fortunately, newer IC switching regulators such as National Semiconductor's LM2576 (one of National's "Simple Switcher®" chips) make it almost as easy as using a 7805. The LM2576 is also available from ON Semiconductors and Micrel. The chip is available in a five-lead TO-220 package as shown in Figure 1, as well as a TO-263 surface-mount package. The device is rated for three amps maximum and is available in fixed-output versions (3.3V, 5V, 12V, 15V) and in an adjustable-output version.

When prototyping projects, a small printed circuit board (PCB) with an adjustable regulator is handy to have around. Here, we will build just such a board using the LM2576T-ADJ (the adjustable version in a TO-220 package). The schematic is shown in Figure 2.

I wanted a design for currents up to one amp or so. Since it's always good practice to derate power components, I picked the LM2576 because it's rated for three amps. Note that diode D1 is there as protection against applying reverse polarity to the input. If you're the gambling type, you can omit it. But remember Murphy's Law: If a mistake *can* happen, then it *will* happen.

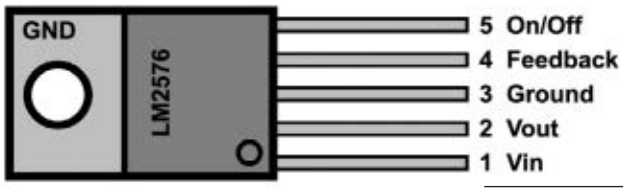

■ FIGURE 1

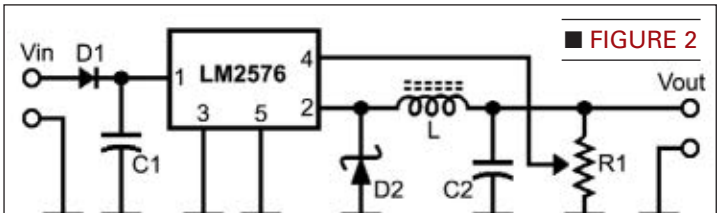

■ FIGURE 2

Some Theory

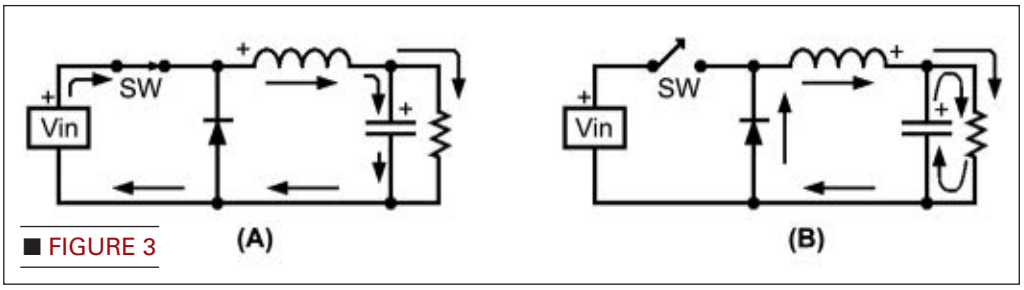

■ FIGURE 3

In linear regulators, an internal pass transistor is always in conduction. But in a switching regulator, the internal transistor switches between full-on and full-off. When full-on, the transistor saturates and the drop across it is almost zero, so power dissipated is almost zero. When full-off, the transistor is cut off and the current is zero, so the power dissipated is zero. But if the transistor is switching between on and off, how can you get a DC current from the output? This is where the inductor comes in. Refer to Figure 3, a simplified version of our buck circuit (see sidebar on Switch-Mode Topology).

In (A), the switch is closed (transistor on). Current flows from Vin, through the inductor, through the load, and back to Vin. As the current ramps up, a magnetic field builds up in the inductor and an electric field builds up in the capacitor. As its magnetic field expands with increasing current, the inductor opposes the flow of current by generating a back EMF, as indicated by the plus sign. Note that the diode is reverse-biased and does not conduct.

In (B), the switch is open (transistor off). An open switch breaks the flow of current from Vin through the inductor, and its magnetic field starts to collapse. But the magnetic field stores energy in the inductor, and energy can't just vanish. So the collapsing magnetic field of the inductor generates a voltage that keeps the current flowing in the same direction, as indicated by the plus sign. The current that flows when the switch is open transfers energy from the inductor to the load. The voltage generated by the inductor will forward-bias the diode and allow the current to flow in a closed loop. (The current would flow without that diode, but it would do so by creating a high voltage spark — like in a car's ignition!)

Then the switch closes again and the cycle repeats itself. The output voltage is determined by the duty cycle of the switch. The duty cycle is set by a feedback loop not shown in Figure 3. The capacitor reduces ripple voltage across the load.

Duty Cycle and Output Voltage

Let's define the *cycle time* of a switcher as the inverse of the switching frequency: T = 1/f. Then *duty cycle* (d) is the ratio of the time the switch is closed to the cycle time.

In a switching regulator, the relationship between output voltage (Vout) and input voltage (Vin) depends on the duty cycle:

Vout = d x Vin

Now that we know the theory, let's build one.

Building One

Before laying out a circuit board, it's always a good idea to make a breadboard. Figure 4 show the circuit built on a pre-punched proto board. Such boards are available from RadioShack as well as other vendors. The two-position PCB terminal blocks are RadioShack part #276-1388. They come four to a pack.

In Figure 4, you can see a heavy bead of solder applied down a middle conductor strip. That strip is the ground rail, and the heavy solder is to ensure low resistance. In laying out a switching regulator, it's important to keep ground connections short and low impedance. You want the ground rail to look like a single point to the LM2576. I used a push-on heatsink on the IC because it got a bit warm when drawing maximum current. It's not necessary for lower currents. In fact, it

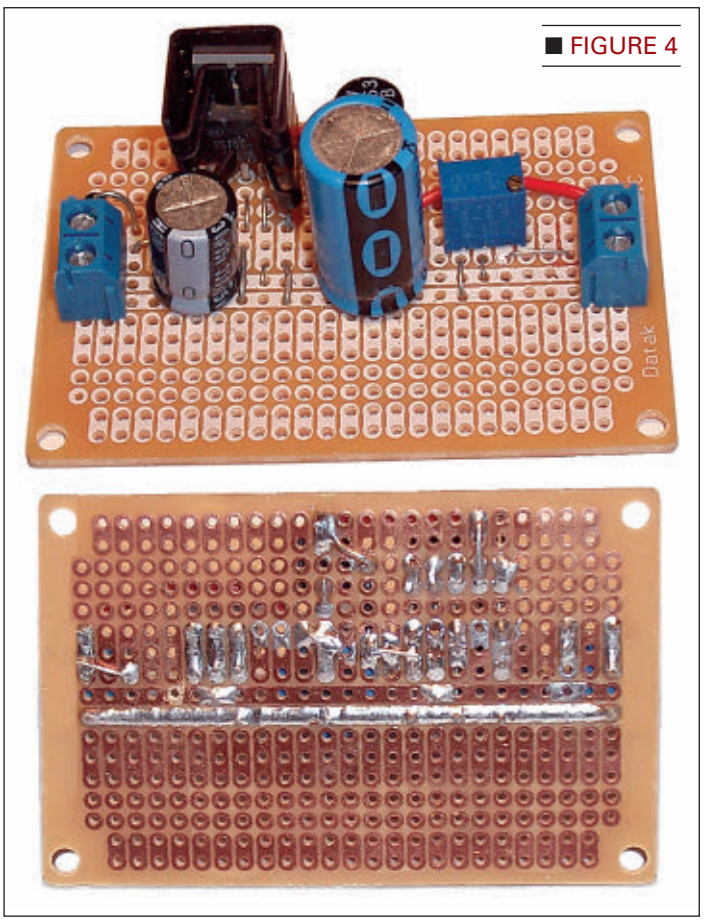

■ FIGURE 4

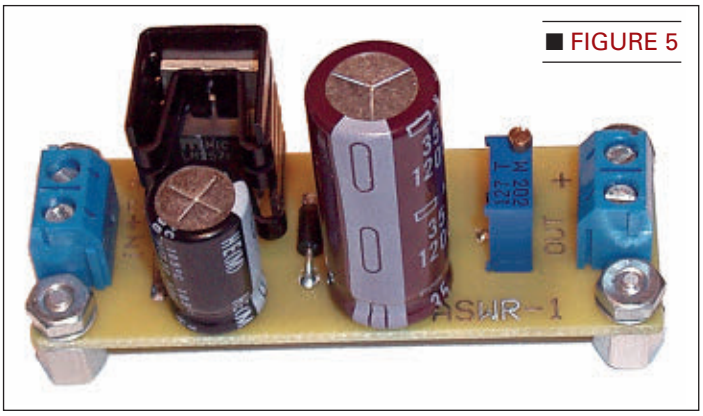

■ FIGURE 5

may not be necessary at all; I've run it at one amp without a heatsink for long periods of time. (Here's a rule of thumb: Put your thumb on the device. If you can keep your thumb there without getting a burn, it's not too hot. If you yell and jerk your thumb away, you need a heatsink!)

Once the breadboard version was checked out, a PCB version was built as shown in Figure 5 (the inductor is behind the big cap in the middle). While Figure 5 shows a double-sided board, the only important copper on the component side is a single jumper. The rest of the component side copper is lettering (IN, OUT, etc.). So, the board could be made as a single-sided board requiring one jumper wire. The solder side layout is available on the *Nuts & Volts* website (**www.nutsvolts.com**).

The Inductor

Since this is the key component, we'll discuss it first. The National Semiconductor datasheet for the LM2576 has a detailed procedure for selecting an appropriate inductor value. Looking at those volt-second calculations and the various graphs of L as a function of Vin and Iout, it can be a bit daunting if you've never done it before. Actually, though, it's not that hard.

I want a design that will deliver up to one amp with an input voltage that could be any value from 12 to 32

Switch-Mode Topology

Switch-mode circuits can be classified into one of two categories: *isolated* or *non-isolated*. Non-isolated circuits have a common ground for the input and output voltages; isolated circuits do not. Furthermore, non-isolated switching regulators can be classified by their topologies, where the term *topology* mainly refers to the relationship between the switch and the inductor. There are three commonly used topologies: *buck*, *boost*, and *buck-boost*. (There are other topologies, such as *Cuk* and *Sepic* with more complicated circuitry for improved performance.)

Buck

The regulator described in this article is a buck circuit. It's called that because when the switch is closed, the back EMF of the inductor opposes (or "bucks") the flow of current. With a buck regulator, the output voltage is always less than the input voltage.

Boost

The regulator of Figure S1 is a boost circuit. Let's suppose it has been running for a while so there is voltage on the capacitor. In (A), the switch is closed and the inductor is charging up its magnetic field. The diode is reverse-biased, and the load resistor is drawing current from the capacitor. In (B), the switch opens and the collapsing magnetic field of the inductor produces voltage with a polarity that adds in series with Vin. The diode is forward-biased and the capacitor charges up to a voltage that is higher than Vin. The output voltage has been boosted up. As with the buck converter, the output voltage is a function of the duty cycle. (The duty cycle is controlled by a feedback loop not shown in Figure S1.)

Buck-Boost

Note that for both the boost and buck circuits, the polarity of the output voltage is the same as the polarity of the input voltage, with respect to the common ground. That changes with the buck-boost circuit shown in Figure S2. In (A), the switch is closed, the diode is reverse-biased, and the inductor charges up. In (B), the switch opens and the collapsing magnetic field of the inductor produces a voltage that charges up the capacitor so that the output voltage is negative, with respect to ground even though the input voltage was positive. The magnitude of Vout depends on the duty cycle (d). If d < 0.5, then |Vout| < |Vin|. If d > 0.5, then |Vout| > |Vin|. As before, the duty cycle is controlled by a feedback loop not shown in Figure S2.

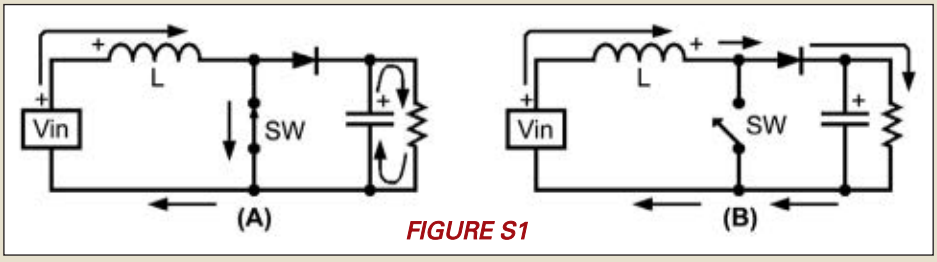

FIGURE S1

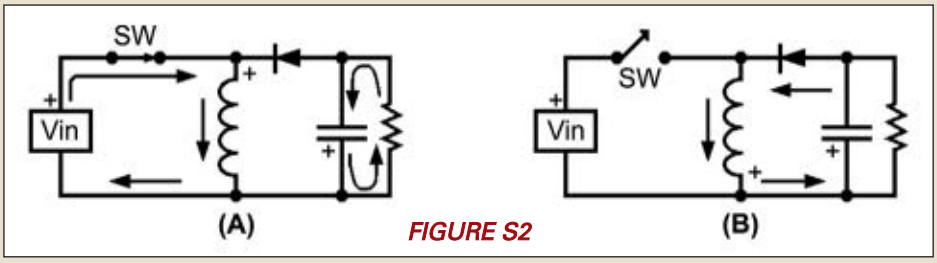

FIGURE S2

volts. Looking at Figure 6, move across the bottom axis to the one amp vertical line. Then follow that line up to the 40 volt horizontal line. That puts you into a region marked 220 µH, almost into the 330 µH region. Note that higher input voltage requires greater inductance. I'm not actually going up to 40 volts, so a 220 µH should do the job. (So would 330 µH; it doesn't hurt to go a bit larger.)

We're looking for a power inductor; one that will keep its value with one amp flowing through it. Such an inductor is sometimes called a choke. You can obtain suitable power inductors from vendors such as Jameco. (You can also make them yourself, but that's another article!) I used a surplus drum choke from All Electronics (part #CR-220). The inductor (shown in Figure 7) is 220 µH and was made by Coilcraft (part #TV1363-B).

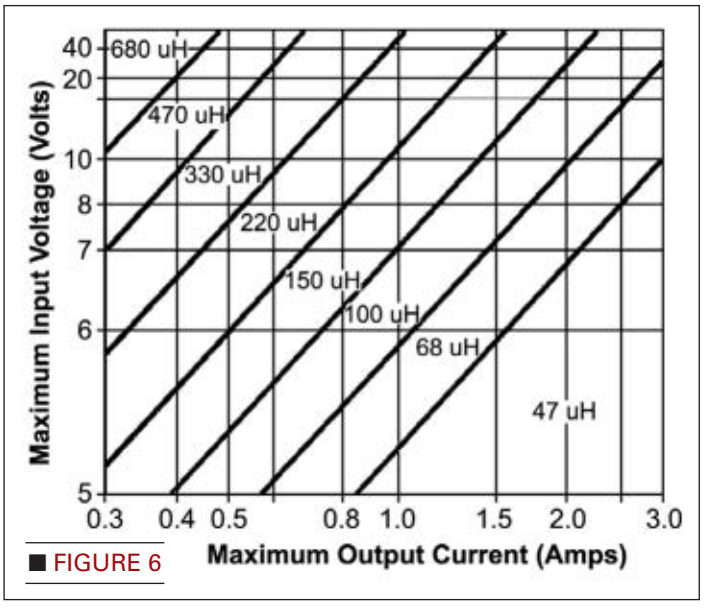

■ FIGURE 6

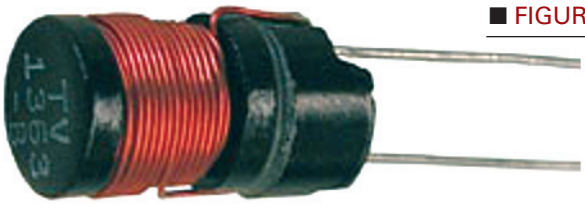
■ FIGURE 7

Diodes

As mentioned before, diode D1 protects against reverse polarity input voltage. A 1N4001 or similar diode will do the job. Diode D2 is the commutating (or *catch*) diode. As discussed, the catch diode (also called a *free-wheeling diode*) provides a closed loop for the inductor current when the switch opens. In a switching regulator, the switch opens and closes a lot faster than 60 times a second. The LM2576 switches at 52 kHz; other regulators switch at frequencies up ove a megahertz so the selection of catch diode is important.

While diodes like the 1N4001 work fine at 60 Hz, they don't work so well at the high frequencies used in switching regulators. A certain amount of capacitance is associated with a reverse-biased diode. When going from off to on (conducting), that capacitance needs to be discharged. And when going from on to off, that capacitance needs to be charged. The time required for a diode to switch from on to off is called the *reverse recovery time* (trr). For a 1N4001, trr is about 30 µs.

But at 52 kHz, the cycle time is $T = 1/(52 \times 10^{3})$ which is about 19 µs. What would happen if we used a 1N4001 as the catch diode in our circuit? With a recovery time almost twice as long as the cycle time, the diode would never stop conducting. We might as well replace it with a piece of wire! Obviously, we need a faster diode. There are several types of *switching diodes* designed to be used as catch diodes; they have a small trr. One type commonly used is a *Schottky* diode (also called a Schottky Barrier rectifier). Not only are they fast, Schottky diodes also drop less voltage than a conventional diode while conducting. In this project, we will use a 1N5819 Schottky diode which has trr less than 10 nanoseconds and a forward drop of 0.6 volts at one amp. For comparison, a 1N4001 diode has a forward drop of 1.1 volts at one amp.

Capacitors

Two electrolytic capacitors are required in our regulator, C1 and C2. The function of C2 is to filter ripple from the output voltage. Since we are switching at 52 kHz, the value of C2 is smaller than what would be required to filter out 60 Hz ripple in a linear power supply. Figure 8 shows the type of ripple C2 is filtering. On the other hand, the function of C1 is to supply pulses of current as the LM2576 switches on and off. Figure 9 shows how current would flow into the LM2576. Note the fast rise time of the waveform. Without C1, inductance in the wire between Vin and the LM2576 would cause a voltage drop every time the device needed current, and the circuit would be unstable.

As with diodes, not all electrolytic caps are the same. Two important parameters for filter capacitors are *ripple*

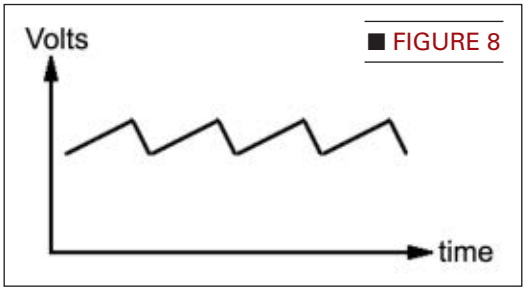

■ FIGURE 8

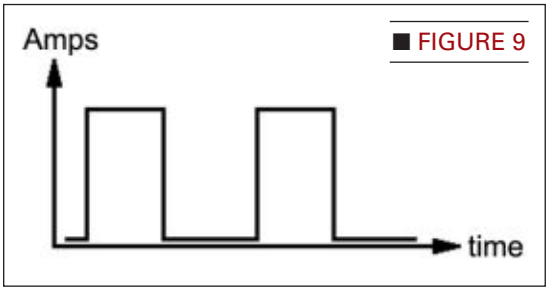

■ FIGURE 9

■ FIGURE 10

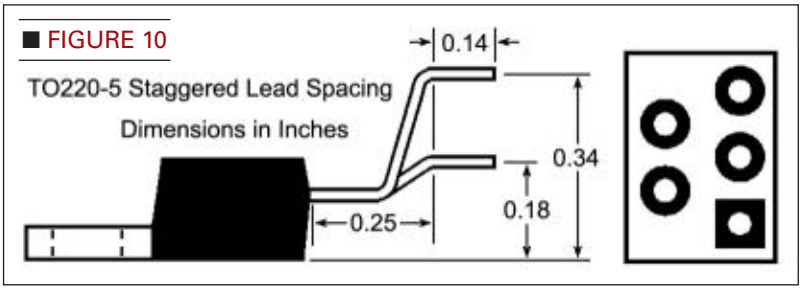

current and *equivalent series resistance* (ESR). ESR is a measure of how much power a capacitor will dissipate as current flows in and out of it. When a DC voltage is applied to a filter cap, any AC ripple on the DC will cause an AC ripple current. The interaction between ESR and ripple current produces heat in the capacitor.

For C2, we can use a general-purpose aluminum electrolytic capacitor. The relatively slow rise and fall times of the voltage applied to C2 causes only a small amount of ripple current. The value of C2 needs to be relatively large to prevent the circuit from oscillating as you adjust the output voltage over its full range. I used 1,200 µF.

Look again at Figure 9. That square wave shape means high ripple current, so C1 must have very low ESR to prevent the capacitor from failing due to heat. (I've seen capacitors get so hot they burned my finger.) I used a Nichicon type HE low-impedance aluminum electrolytic for C1.

The Feedback Path

The potentiometer R1 across the output supplies the feedback required by the LM2576 to keep the output voltage constant at the selected value. The value of R1 is important. If it's too big, then output voltage will drop as you draw current. If it's too small, you're wasting power. A 2K value works well. I used a multi-turn trimpot. A single-turn trimpot will work, but it will be tricky to set the output voltage to a specific value.

Voltage Range

The output can be adjusted from a minimum of about 1.2 volts to a maximum close to the input voltage. The standard version LM2576 has a maximum input of 40 volts. The HV version has a maximum input of 60 volts. For this design, Vin is limited by the 35 VDC capacitors. Vin can be supplied by a fixed power source such as a battery. For many applications, I like to use unregulated, wall mounted DC "power blocks;" inexpensive surplus units can be obtained from many vendors.

Assembly

Assembly is straightforward. The only thing that takes a bit of care is mounting the LM2576 to the PCB. The IC uses the TO-220-5 staggered-lead hole pattern as shown in Figure 10. While there is a pre-formed version of the IC, they're not always available. Most likely, you will have to bend the LM2576 leads to fit the pattern.

Testing

First, give the board a careful visual inspection. Look for the usual suspects:

- Bad solder joints
- Broken copper traces
- Shorted copper traces
- Reversed polarity on capacitors
- Diodes in backwards
- Component leads touching (especially the LM2576 leads)

Once you're sure there are no obvious problems, connect a 470Ω, 1/2 watt resistor to the output terminals as a test load. Connect 12 volts DC to the input terminal. Connect a voltmeter across the load resistor and adjust the trimpot to get five volts output. If all is well, replace the load with a 10Ω, 5 watt resistor and verify that the output is still five volts. If it isn't, re-do the visual inspection; you must have missed something.

That's all there is to it. Switching regulators are not as difficult as you might have thought. **NV**

PARTS LIST

ITEM	DESCRIPTION	SUPPLIER
❑ Printed Circuit Board	Proto-board or custom PCB (see text)	RadioShack #276-150
❑ Inductor	220-330 µH rated at 1A DC minimum (see text)	
❑ Terminal Blocks	Two contacts, .200 spacing	Molex #39890-0302 *or equivalent*
❑ R1	2 kW trimpot	Bourns #3296W-202LF *or equivalent*
❑ C1	330 µF @ 35 VDC, low ESR aluminum electrolytic, radial leads (see text)	
❑ C2	1,200 µ @ 35 VDC, general-purpose aluminum electrolytic, radial leads	
❑ D1	1N4001	
❑ D2	1N5819	
❑ IC	LM2576T-ADJ	
❑ Heatsink		Wakefield 230-75AB *or equivalent*

The PCB and/or complete kit for this project can be purchased through the *Nuts & Volts* Webstore at www.nutsvolts.com or call our order line at 800-783-4624.

RENESAS H8SX

Easy Path to Drive up to WVGA TFT-LCD

Up to 1MIPS/MHz, fast multipliers/dividers, up to 1MB Flash on-chip

Renesas Technology

No. 1* supplier of microcontrollers in the world

introduces the H8SX/1600 Series with TFT-LCD Direct Drive. The performance of the H8SX at 50MHz allows panels up to WVGA size to be driven at 30 frames per second, 16-bit per pixel. The CPU/System remains available for full system operation as well as performance of complex animation. Rich on-chip peripherals perform system interface functions, reducing overall system cost.

H8SX Product Lineup

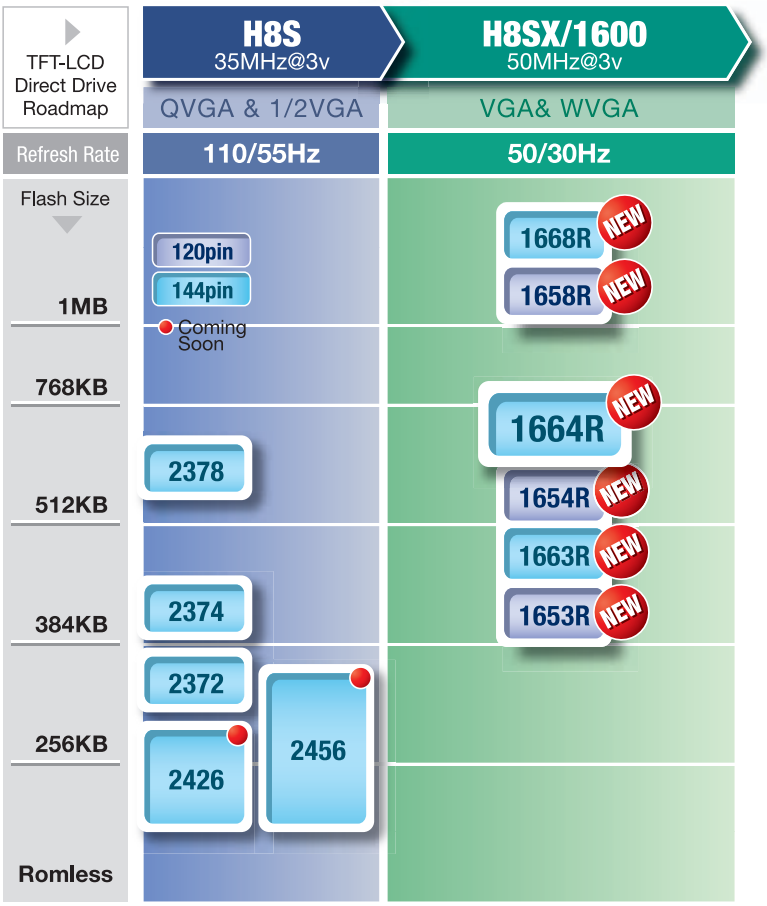

HOT Products — **H8SX/1664R**

WVGA TFT-LCD, 30Hz refresh rate, 16bpp

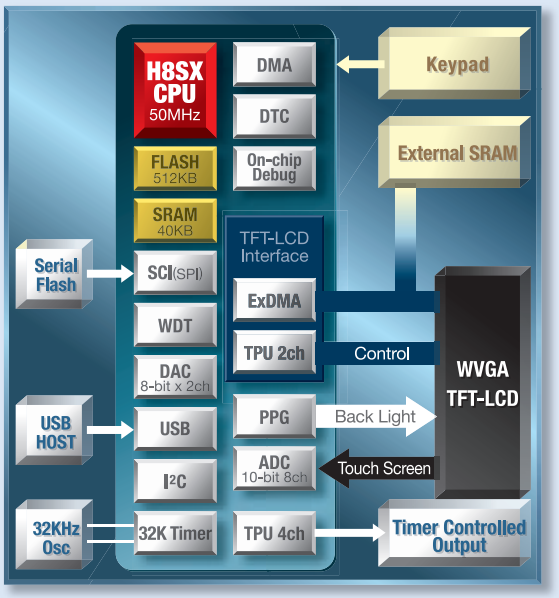

H8SX LCD System Features & Solutions

- **Dual Data Bus System**
- **Parallel LCD Direct Drive**
- **Low Power**
- **CPU Bandwidth Available**
- **Others**
  - 32-bit CISC CPU with built-in Hardware MAC. Up to 50MIPS
  - Internal and External data buses running in parallel
  - VGA panel refreshed at 50 frames per second; system at 50MHz
  - CPU core remains 90% idle during LCD drive
  - ADCs for touch screen and sensor input
  - Complex animation schemes with transparency and translucence
  - Deep Software Standby Mode (4uA) with external input wake up
  - 32KHz clock input with timer
  - Full Software API with complex LCD images supported
  - Driver source code, full documentation, demos
  - Several connectivity interfaces; e.g., USB, serial interfaces, I²C-BUS

*Source: Gartner (March 2007) "2006 Worldwide Microcontroller Vendor Revenue" GJ07168

#1MCU REACH FURTHER

Get Started Today - Go online and learn more about H8 LCD Solutions and get qualified for a free kit

www.america.renesas.com/ReachH8/e

Only available to customers in North and South America

DEVCON Developers Conference

Oct. 13-15 San Diego

www.RenesasDevCon.com

Renesas Technology Corp.

Everywhere you imagine. RENESAS

PRECISION STEREO HEADPHONE AMPLIFIER

BY BRYAN BERGERON

There are two schools of thought in the audiophile world on how to best achieve nirvana. One is to invest in huge power amplifiers and massive speakers in order to reproduce every nuance captured in a recording. The other school — more popular among the space — and financially-constrained, is to invest in low-power precision preamplifiers, amplifiers, and headphones.

Of course, if money is no object, it's easy to spend $6K on a preamp, another $5K on a stereo headphone amplifier, and another $2K on headphones. However, as described here, starting at about $30 in parts for the core amplifier and a weekend of soldering surface-mount components, you can enjoy audiophile sound. In addition to a complete parts list with price and Digi-Key part numbers, as well as the schematic and printed circuit board (PCB) in ExpressPCB format (**www.expresspcb.com**), are posted on the *Nuts & Volts* website. This is an intermediate-level project that involves extensive use of surface-mount components.

Headphone Amplifiers

If you've built or reconditioned a tube-type preamp, it likely doesn't have provisions for headphone output. At the other end of the spectrum, many modern audio players are designed primarily for headphone output, but they stress power or song capacity over output precision. That is, the headphone output from your MP3 player, when coupled with inexpensive ear buds or earphones, is significantly colored. The bass may be accentuated and the midrange diminished relative to the original recording, for example, because of the frequency response curves of the player's amplifier and headphones. The Apple iPod and similar MP3 players provide a partial work-around for coloring by featuring built-in graphic equalizers.

The first step to significantly increasing the quality of audio you hear from your high-end preamp or MP3 player is to use a pair of high-quality, over-the-ear, dynamic headphones. Higher-quality, precision earphones generally have a higher impedance (e.g., 100–300 ohms) compared to the standard 10-20 ohm ear buds that ship with players. Several manufacturers offer high-end ear buds as well, but, in general, it's hard to beat the best over-the-ear variety. The next step is to take the line-out of your CD or MP3 player and use a low-power, high-precision amplifier to drive your dynamic headphones. The motivation for going through all this trouble is a precise, low-distortion reproduction system to hear an audio source as it was recorded. Headphone amplifiers are also popular among guitarists. If you play an electric guitar or electric bass, then you know the peril of practicing around friends and family with your 100 watt Marshall or Fender amp. Headphones are often the only option for musicians who practice in an apartment or dorm.

But do you need a precision headphone amplifier? It depends on your listening preferences and habits. Obviously, if you only listen to your iPod or portable CD player when you're running or in the gym, then this project isn't for you. Similarly, if you play metal or other highly distorted styles, then any headphone amp will probably do. However, if you listen to music at home or in the office and your tastes tend toward classical, jazz, or clean vocals, then you'll probably appreciate the subtle difference a precision amplifier and a good set of

headphones can make. One note of caution about this headphone amplifier: It's capable of driving a set of headphones well above the normal listening levels. As such, if used inappropriately, it can permanently damage your hearing.

Options

Let's say you're convinced that building a headphone amp is a worthy project. What's your next step? A common, inexpensive option is to use the ubiquitous LM386. The monophonic chip has a lot going for it: ruggedness; low cost; ability to work with a single-ended supply and the external component count is low — typically two or three capacitors and resistors for each channel.

The LM386 is fine for driving inexpensive headphones, but noise and distortion figures pale in comparison to what can be achieved with either a well-designed discrete component amplifier or — as with this project — a 'precision' headphone driver IC. Still, if your project budget is $20 or less, you can build a stereo headphone amplifier from the information contained in LM386 datasheets. However, if you long for a more substantial amplifier and aren't intimidated by surface-mount components, then read on.

Design Goals

When I set out to design the headphone amplifier, I had several goals:

- The amplifier had to work with both my high-impedance tube preamplifier and with my Stratocaster electric guitar. In other words, the front end had to be flexible enough to accommodate sources with a range of input impedances.
- Low component count. This favored chips over discrete transistors.
- Modest amplification and power. The goal was to drive a sensitive set of dynamic headphones, not a speaker system.
- High-impedance headphone output. The circuit was designed for my Sennheiser HD 600 (300 ohm) dynamic headphones.
- Low noise and distortion. Noise and distortion figures as low as practical with off-the-shelf op-amps.

The schematic of the second generation design is shown in Figure 1. In developing this design, I used component comparison tools on the National Semiconductor, Texas Instruments, and Analog Devices websites. I also searched the web for headphone amplifier schematics and design suggestions. The Headwize site (**www.headwize.com**) was particularly helpful, in that it offered several headphone amplifier designs and a library of technical papers. The forums on **DiyAudio.com** were also helpful. In the end, I selected the Texas Instruments TPA6120A2 precision stereo headphone amplifier chip and a pair of Analog Devices AD8610 op-amps as the major active elements of the precision headphone amplifier.

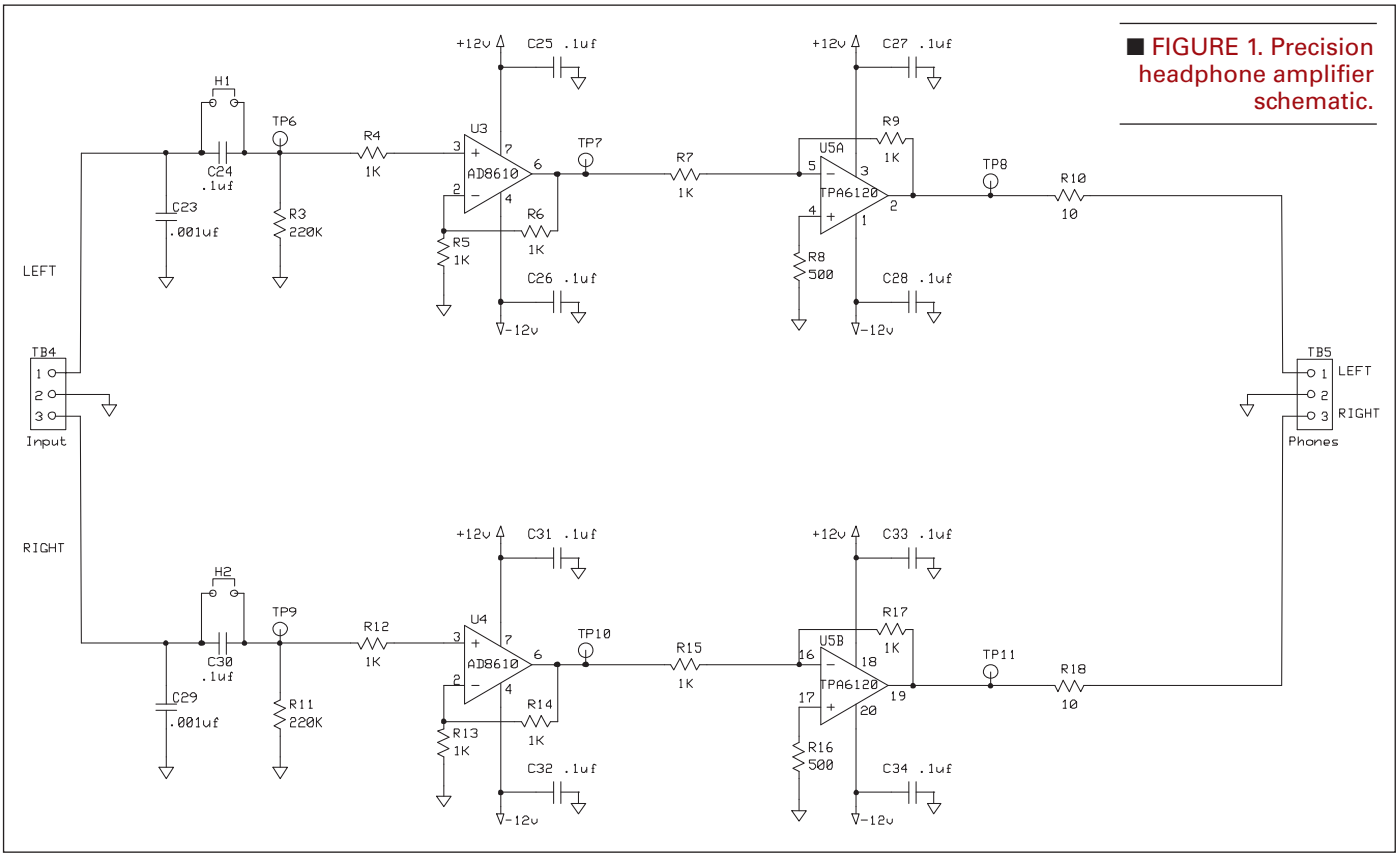

■ FIGURE 1. Precision headphone amplifier schematic.

The schematic of the amplifier shows the straightforward, symmetrical design with two AD8610s each driving half of the TPA6120A2. Note that the positive and negative power supply leads are bypassed at the ICs, and that the input capacitors (C24 and C30) can be shorted if the input doesn't contain a DC voltage. In addition — as per the datasheet from Texas Instruments, the output current is limited by 10 ohm resistors (R10 and R13) in series with the output of each channel.

The power supply (Figure 2) provides both +12 VDC @ 1A and -12 VDC @ 1A. As is often the case in audiophile equipment, the power supply is over-designed and more costly than the amplifier circuit proper. If you download the detailed parts list with Digi-Key part numbers from the *Nuts & Volts* website, you'll see that the cost for power supply components is about $50.

In the first version of my amplifier, I followed a schematic on the web that took advantage of the separate supply lines to each channel of the TPA6120A2. However, I couldn't hear or measure any difference in separation or noise when I substituted a single supply for the dual supply.

You can shave cost from the power supply by substituting a laminated core transformer for the toroidal transformer. For a given VA capacity, toroidal transformers are generally more efficient and produce lower intensity stray magnetic fields than laminated core transformers. You can also leave out the indicator LEDs (D2 and D4) and, if you must, the DC fuses (F2 and F3). A third option is to use a supply of your own design. Avoid a switching power supply, however, because it will likely generate audio noise.

Components

Following is the rationale for the components selected for this project, together with a discussion of component substitution options.

TPA6120A2

The Texas Instruments TPA6120A2, marketed as a high fidelity headphone amplifier, uses a current-feedback architecture with differential inputs and single-ended outputs. According to the product sheet, the current-feedback design results in low voltage noise, high open-loop gain throughout a large frequency range, and low distortion. As I noted earlier, the TPA6120A2 contains two independent amplifiers, each with its own voltage supply. The specifications for the TPA6120A2 include:

- 80 mW into 600 from a ±12V supply at 0.00014% THD + N

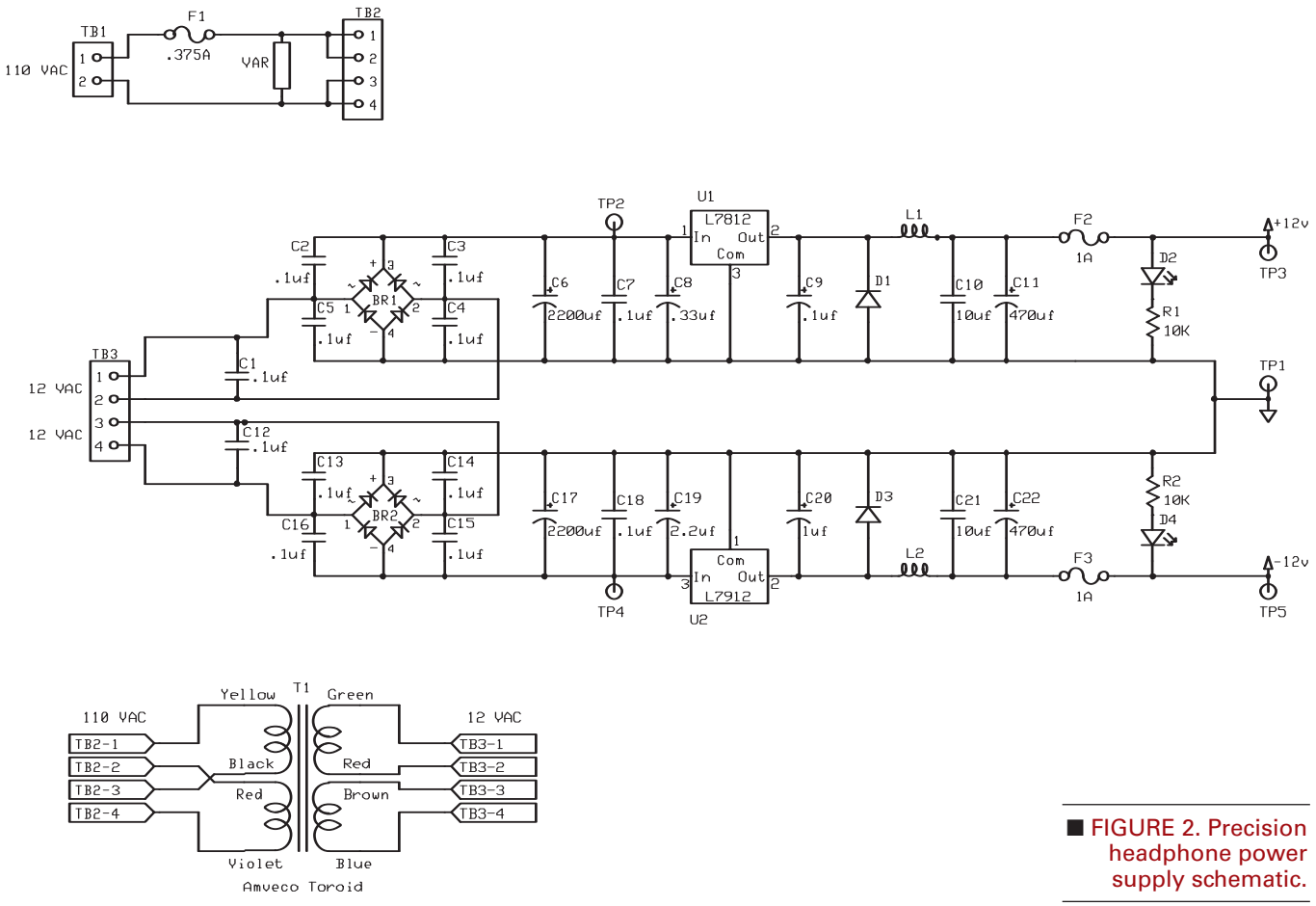

■ FIGURE 2. Precision headphone power supply schematic.

- Greater than 120 dB of dynamic range
- SNR of 120 dB
- Output voltage noise of 5 µVrms at gain = 2V/V
- Power supply range: ±5V to ±15V
- 1300 V/µs slew Rate
- Independent power supplies for low crosstalk
- Short circuit and thermal protection

The total harmonic distortion plus noise (THD+N), dynamic range, signal-to-noise ratio (SNR), and slew rate (the maximum rate of change of a signal at any point in a circuit) are excellent. For comparison, the THD+N figure for a National Semiconductor LM386 is 0.2%.

Although great specifications don't necessarily translate to great sound, they do set a baseline for what is possible. See the Texas Instruments website (**www.ti.com**) for the official datasheet, application notes, and user guide for the TPA6120A2. More importantly, download the documentation on the TPA6120A2 evaluation module, which provides drawings of suggested component layouts and ground plane configuration. I used the ground plane configuration from the evaluation module as a model for the design presented here.

AD8610

The Analog Devices AD8610 is a surface-mount JFET input op-amp with low offset voltage and drift, low current noise, and low input bias current. Two of these wide bandwidth op-amps are used in the project as precision signal-level buffers. See Analog Devices website (**www.analog.com**) for the datasheet with detailed specifications.

In brief, the noise figure and slew rate of the AD8610 complement those of the TPA6120A2. Even so, feel free to substitute your favorite low-noise op-amp for the AD8610. Many op-amps are pin-compatible with the AD8610 and you should be able to use the existing component values. Why use a different op-amp? Some audiophiles claim to hear a difference in the audio produced by different op-amps — but I confess, I can't detect a difference.

Passive Components

Resistors are not created equal. Ordinary thin film surface-mount resistors — while inexpensive — are noisier and less stable than metal film resistors. I suggest you use metal film resistors throughout the project. You might save a dollar or two by using thin film surface-mount resistors instead, but at least consider metal film resistors for the input circuit to the AD8610s. Resistor-generated noise is more noticeable when inserted early in the amplifier chain. Most of the capacitors used for the signal path are low-noise PPS film. You may be tempted to substitute less expensive ceramic capacitors for PPS film capacitors, but you'll have better results with the film variety.

Connectors

The connectors used in this project are RCA jacks for audio input and 1/4 inch audio jacks for instrument input and audio output. The instrumentation input audio jack is a mono phone jack with transfer circuit that connects the inputs of the left and right channels together when a 1/4 plug is inserted into the jack. The only splurge item in the connector category is the set of gold and Teflon RCA jacks, shown in Figure 3. The connectors, available from DIYCable.com (**www.diycable.com**), are about double the price of what you can pick up from Digi-Key, but the higher quality is obvious. In addition, the Teflon insulators allow you to float the ground until the signal reaches the input of the amplifier or input attenuator.

Potentiometer/Attenuator

The input circuit shown in Figure 1 is designed for a fixed, tube-based preamp input. If you want to work with a variety of input sources, then consider adding a stereo potentiometer to the circuit. For each channel, feed the input signal across the full resistance of the potentiometer and take the signal from the wiper arm as the input to the amplifier.

An inexpensive audio taper pot from Alpha or RadioShack will cost about $3. For about $40, you can use an audiophile-quality pot by ALPS. The third option is to use a variable attenuator, which is a switched series of discrete resistors. Popular brands for switched attenuators are DACT and GoldPoint, at about $170. I've also seen stepped attenuator kits from China on eBay, starting at about $30. I chose a 50K stepped attenuator from GoldPoint for this project (see Figure 4).

What do you get from a stepped attenuator for such a huge outlay? One is the 'feel' of the stepped level control, especially when coupled with a large, heavy knob. The second is precision relative tracking, as shown in Figure 5. As shown in the figure, as the inexpensive 50K Alpha pot is moved through its full range of resistance, the difference in resistance between left and right elements ranges from 0 to about 5K, with a marked peak around 18K. The tracking of the more expensive ALPHA potentiometer is much better, with a maximum difference of about 1.5K. The GoldPoint stepped attenuator, in comparison, showed no significant difference throughout the 50K ohm range.

We could debate whether the variation in relative tracking for a given pot is detectable — most humans can

■ FIGURE 3. Gold and Teflon RCA jacks.

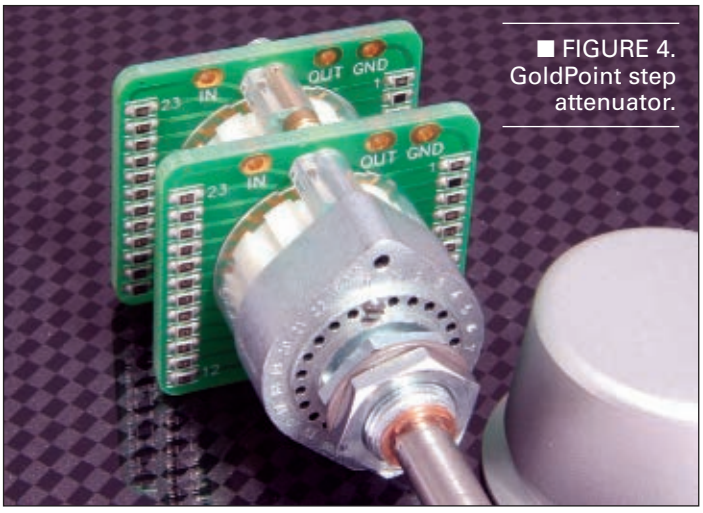

■ FIGURE 4. GoldPoint step attenuator.

detect a 3 db difference in sound level. We could also debate whether a simple balance control would provide a better, inexpensive solution for the channel tracking errors than a step attenuator. The choice is yours. However, at least consider the Alpha potentiometer as an alternative to a garden-variety potentiometer.

Layout

The layout of this project is straightforward. Simply follow the fully documented component layout layer on the PCB layout file. The file format is ExpressPCB, and the application for reading and editing the file is available for free download. If you elect to use an external power supply or a supply of your own design, then about 70% of the board design can be deleted.

Figure 6 shows the component side of the board, and Figure 7 shows a close-up of the amplifier section of the populated board. Note the 20-pin TPA6120A2 near the upper third of Figure 7.

■ FIGURE 5. Relative tracking, 50K stereo pots, and step attenuator.

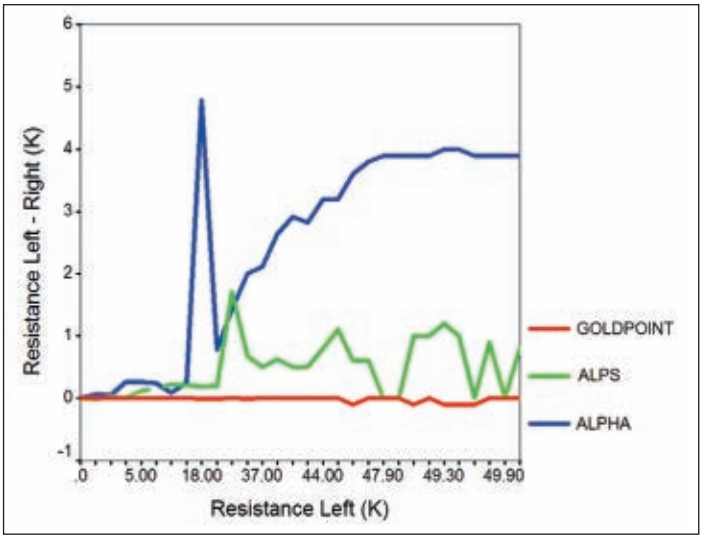

Figure 8 shows the ground plane configuration and thermal vias for the TPA6120A2, taken from the ExpressPCB file. The TPA6120A2 is susceptible to oscillations, and removing the ground plane under key leads reduces inter-lead capacitance and tendency to oscillate. The ground plane is shown in green.

Construction

Working with the 20-pin surface-mount TPA6120A2 presents a modest challenge in that the belly of the IC must be soldered to thermal vias on the PCB. A hot air pencil is useful but not necessary for this step.

The cables, connectors, and other peripheral components should be wired directly to the relevant terminal blocks on the PCB. Keep the AC input lines separate from the audio input cables and output cables. Figure 9 shows the completed amplifier with toroidal transformer attached, ready for mounting, and Figure 10 shows a close-up of the instrument input jack and step attenuator wiring.

Testing

Carefully inspect your work — especially the solder joints of the three ICs. Use a low-current ohmmeter to check for obvious shorts. Use the test points to compare values from left and right channels.

Before you apply AC power, remove the two 1A fuses. Apply AC power to the transformer and verify that the power supply produces both +12 VDC and -12 VDC. Disconnect the AC power, replace the fuses, and reapply power. Apply a signal to the input jack and monitor the output with a pair of headphones. Because the amplifier circuit is symmetrical, voltage and signal levels should be symmetrical, as well. Therefore, if one side of your amplifier isn't working, use voltage and signal measurements from the other side as a reference.

Packaging

Although any aluminum box of appropriate dimensions will do, I'm fond of the Hamond extruded

■ FIGURE 6. Printed Circuit Board, component side.

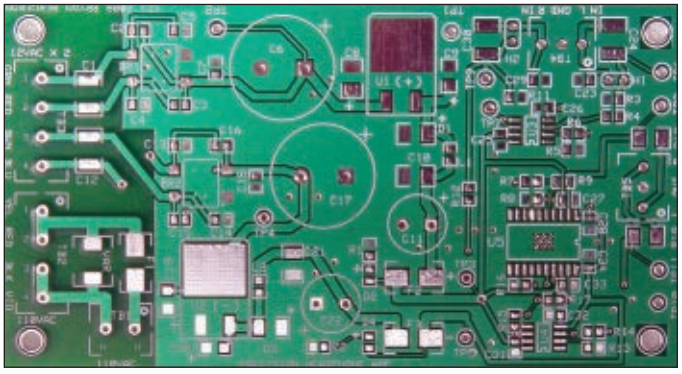

■ FIGURE 7. Close-up of the audio amplifier section of the populated PCB.

aluminum boxes, and used the 8.6 x 6.3 x 2 inch HM905-ND with aluminum front and rear panels. For the front panel (see Figure 11), I splurged and designed a custom blue, white, and red one, using the software from Front Panel Express (**www.frontpanelexpress.com**). For the rear, I used the panel that shipped with the Hamond box and ironed on lettering from a laser printout on Staples Photo Paper. Clean the panel with acetone before you iron on the lettering. Soak the paper in lukewarm water and peel it from the panel to expose the black lettering. Use your fingertips (not nails) to rub any paper remaining on the panel. Dry the panel and finish with Krylon satin clear coat.

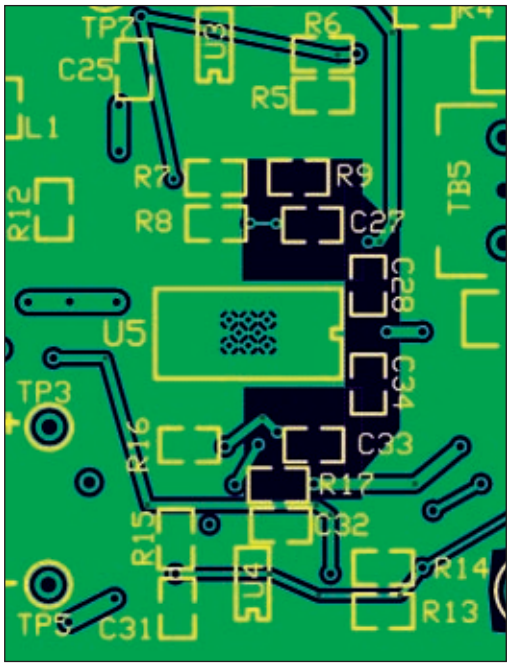

■ FIGURE 8. ExpressPCB layout showing ground plane configuration and thermal vias for the TPA6120A2 (U5).

Evaluation

Subjectively, the amplifier performs as well as my expensive commercial audio gear. It's obviously much quieter than an LM386-based headphone amplifier that I built for another project. Music from my tube-type preamp, as well as guitar tones, are clean and crisp.

A proper comparison of this amplifier with other amplifiers involves objective measurements of factors such as THD+N. If you don't happen to have a room full of audio test equipment, I suggest you use an inexpensive PC-based audio spectrum analyzer, such as TrueRTA. A low-resolution, fully-operational version of TrueRTA is available for free download from **www.TrueAudio.com**.

Figure 12 shows the noise level of the amplifier from 0–50 kHz. As you can see from the figure, the noise level is constant across the measurement range at about -93 dB. As described in the TrueRTA documentation, the noise floor of your PC sound card limits the minimum noise that can be measured. Because of differences in sound cards and the impedance mismatch between the sound card input and amplifier output, I consider comparative results more meaningful than absolute measurement values. TrueRTA showed the noise floor for my 386-based amplifier was about 20 dB greater than for the precision amplifier.

Figure 13 shows the frequency response of the amplifier, again using TrueRTA. With the low-pass filter

■ FIGURE 9. Amplifier with standoffs and toroidal transformer, ready for mounting.

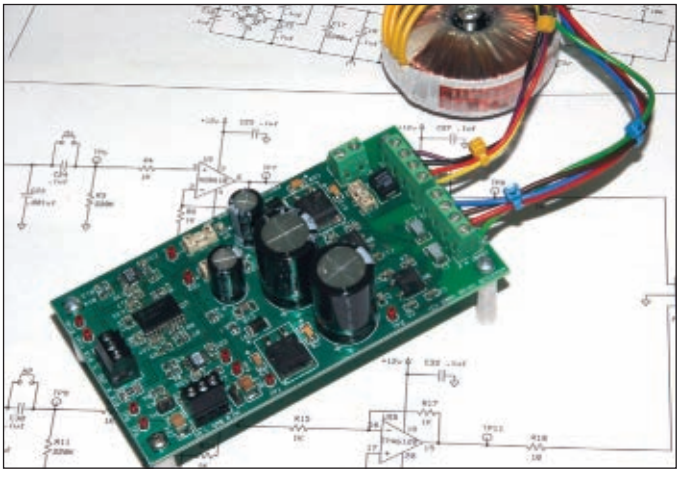

■ FIGURE 10. Wiring of step attenuator and instrument input jack.

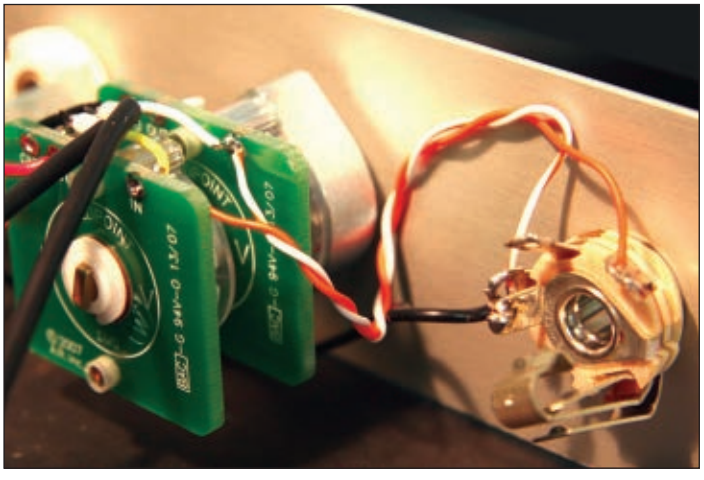

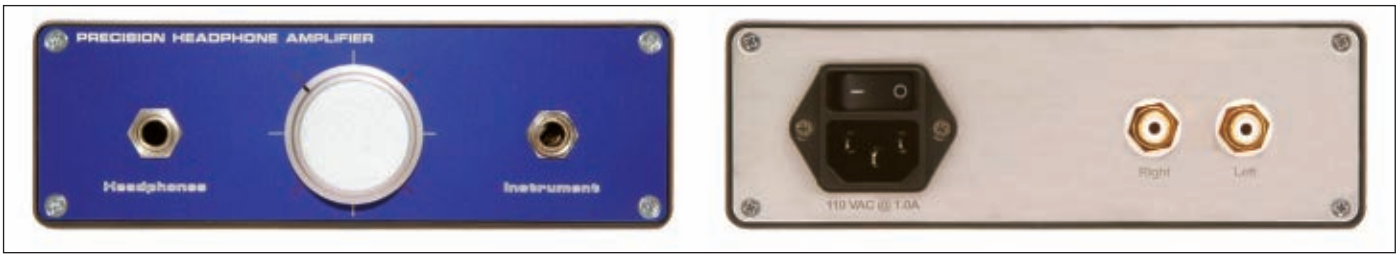

■ FIGURE 11. Front (left) and back (right) panel.

front end shown in the schematic with the 220K ohm resistor, the frequency response is flat from 0 to about 18 kHz. If your sound sources include signals above 18 kHz (and you can actually hear the signals), then consider modifying the input circuit. Removing the 220K resistor and using the 50K step attenuator results in a virtually flat frequency response from 0 to about 20 kHz, as shown in Figure 14. Note the curious frequency response between 20 kHz and 50 kHz associated with each input configuration.

■ FIGURE 12. Amplifier noise level, 0–50 kHz.

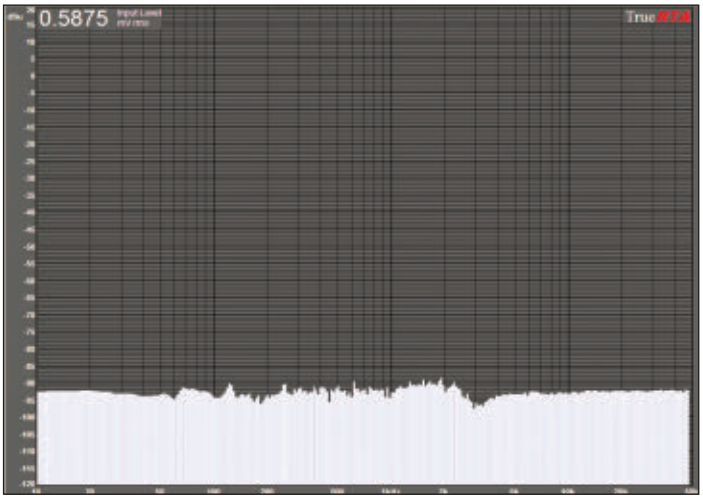

From Here

The amplifier described here is meant to be modified to suit your needs. For example, I built two amplifiers, one configured as in the schematic, and mounted it permanently in my tube-type preamplifier.

I built a second amplifier with 50K stepped attenuator front end and mounted it in a Hamond case to use with my CD player, iPod, and electric guitar. I added an inexpensive line filter to reduce common mode noise. In addition, I replaced the 1K resistors at R6 and R14 with 2K resistors to provide 2x gain. As with most op-amps, the gain of the AD8610 is proportional to R6/R5 in the left channel and R14/R16 in the right channel. You can create a variable amplification option by replacing R6 and R14 with on-board eight-position switches and surface-mount resistors. Another option is to replace R6 and R14 with 10K pots. **NV**

Resources

■ Custom engraved front panels. Front Panel Express. **www.frontpanelexpress.com**.

■ Step attenuators, audio connectors, capacitors, and cables. DIYCable.com. **www.diycable.com**

■ Step attenuators, knobs, and shaft couplers. GoldPoint. **www.goldpt.com**.

■ FIGURE 13. Frequency response with front end, as per schematic.

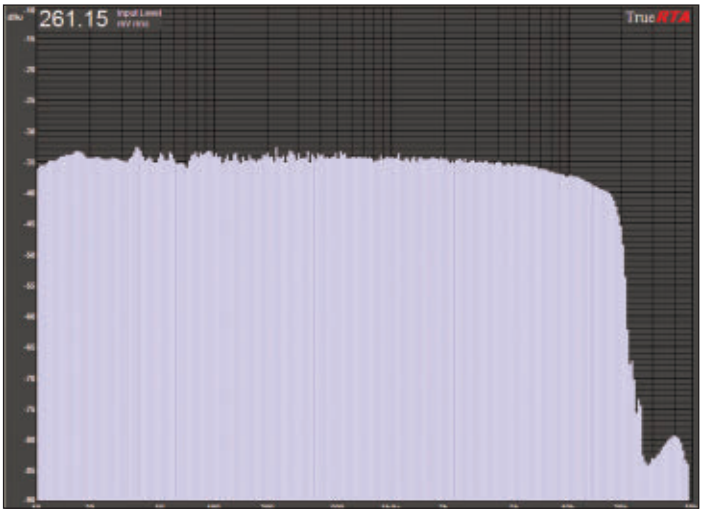

■ FIGURE 14. Frequency response with 50K stepped attenuator input.

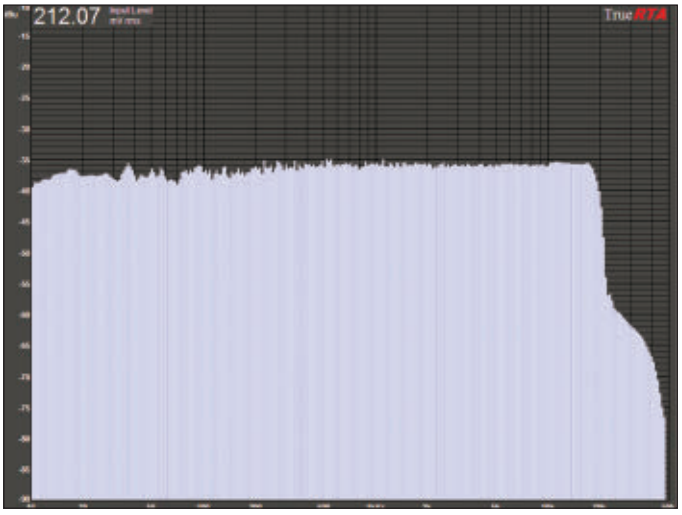

Build Your Own:

THEREMIN

Theremax
The Ultimate Theremin

PAiA
paia.com
Electronic Music Kits and More

Music/Tutorials/Kits
Analog Synthesizers
Guitar Effects
Tube Electronics
Studio Gear

ELECTRONIC GOLDMINE
VISIT US ONLINE TO SEE OUR LATEST PRODUCTS AND PROMOTIONS

VISIT OUR ONLINE STORE AT:
www.goldmine-elec.com
THE ELECTRONIC GOLDMINE
Toll Free Order Line: 1-800-445-0697
P.O. Box 5408
Scottsdale, AZ 85261

Super Flux 8000MCD RGB LED

Amazing common anode Red Green Blue 8000MCD 5mm clear lens super flux LED. Red, Green, Blue, and color combinations can be made. Voltage requirements are as follows:Red 2 to 2.4V, Green 3.4 to 3.8V, and Blue 3.4 to 3.8V. DC forward current 20mA. Viewing angle 120º. Brand new factory fresh.

G16721 $2.49 ea

Brilliant Blue/Green LED

This T1 3/4 (5mm) clear lens LED produces a brilliant bluish green output. It's a very intense beautiful color. Operates on 3VDC @ 20mA. Part# QLMP-CE95-UX.

G16645 4/$1.00

Nidec Beta SL 12VDC Fan

Nidec model D08R-12TS1 operateson12VDC@.09Amp. This 80mm sq x 15mm thick fan features 11 fan blades for great cooling. Has 3 wires: (2 for power and one for alarm indicator). Brand new - Blowout pricing!

G16577 $1.49 ea

Amazing Wire Glue

Make electrical connections quickly without heat or solder. Attach wires to glass solar panels, batteries, etc. using this amazing product. Highly conductive non-toxic no lead product is great for low voltage electrical connections. Just apply and allow to cure overnight. Brand new in blister pack jar containing .3FL oz.

G16133 $3.95 ea

Large Universal Breadboard

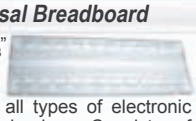

White 6½" x 2⅛" quick connect breadboard accepts almost all types of electronic components and wires. Consists of 126 groups of 5 connected terminal points and 8 bus lines of 25 connected terminals. Brand new - First quality.

G8534 $6.95 ea

Jumper Wire Assortment

Handy assortment of pre-stripped formed 22 gauge solid jumper wires feature various colors and lengths. You get 140 pieces in a handy clear plastic reclosable storage box.

G16572 $6.95 ea

*All orders must include Shipping Charges. Minimum order $10.00 + Shipping

---

NEW!

PROTEUS

The Complete Design Solution

Save time & money on your next embedded design!

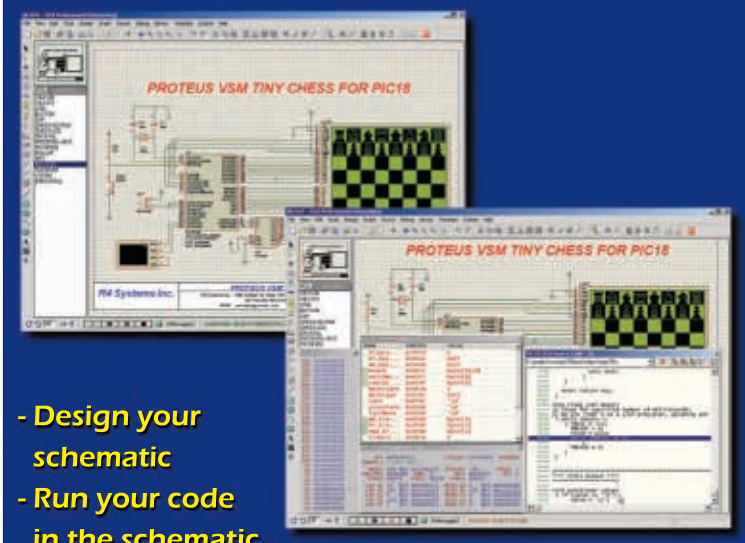

- Design your schematic
- Run your code in the schematic
- Debug C, Basic, or ASM code
- Run or single step
- Add breakpoints
- View source code, variables, stack, etc.
- Debug in 1/3 the time
- Make your PCB

* Includes tools to debug I2C, SPI, serial communcations, etc. USB Analyzer available.
* FREE downloadable demo

"I am very pleased with the simulator. I got my project designed and working in no time, without having to develop a breadboard. Well worth every penny we paid for it!!"

- Boeing Satellite Development Center, El Segundo, CA

R4 SYSTEMS, INC.
Toll Free: 866.499.8184
info@r4systems.com

Other Products:
SourceBoost Boost C
Discovering PIC Books & Kits
C Compilers for PIC & AVR

Proteus Starter Kit $279 * Complete Systems from $549

Works with popular compilers and assemblers:
CCS, Keil, IAR, BoostC, HiTech, CodeVisionAVR, Byte Craft, Imagecraft
Available for PIC, 8051, AVR, HC11, ARM/LPC2000 and BASIC Stamp

www.r4systems.com

WIRELESS MADE SIMPLE®

BRING YOUR PRODUCT QUICKLY AND LEGALLY TO MARKET

RF Modules

*Add **INSTANT** wireless analog / digital capability to your product.*

Low-Cost TX, RX &TRX Modules

Multi-Channel Modules

Long-Range Modules

OEM Products

FCC PRE-CERTIFIED & ready to customize for your application.

Handheld TXs

Keyfob TXs

Function Modules

Feature Products

A closer look at Linx innovation

LOW-COST • LONG-RANGE TRANSCEIVER

- Direct serial interface
- Low power consumption
- PLL-synthesized architecture
- RSSI and power-down functions
- Compact surface-mount package
- No external RF components (except antenna)

REMOTE CONTROL TRANSCODER IC

- Up to 8 inputs
- Bi-directional control
- Transmitter ID output
- Automatic confirmation
- Secure 2^{28} possible addresses
- Latched and/or momentary outputs

LINX® TECHNOLOGIES
WIRELESS MADE SIMPLE

800-736-6677
159 Ort Lane · Merlin, OR 97532
www.linxtechnologies.com

FRONT PANELS & ENCLOSURES

Customized front panels can be easily designed with our free software Front Panel Designer

- Cost-effective prototypes and production runs
- Wide range of materials or customization of provided material
- Automatic price calculation
- Fabrication in 1, 3 or 7 days

Sample price: $43.78 plus S&H

FRONT PANEL EXPRESS

www.frontpanelexpress.com
(206) 768-0602

Metal Fabrication

Quality parts within 24 hours!!

Materials from 0.001” to 6.000” in thickness.

Parts from practically any material.

Finishes such as powder coat, paint, plating, anodizing, silk screen, and more!

Every job is an extension of IIT. We meet and exceed the quality and service expectations of our clients on a consistent basis. Contact sales at (208) 665-2166 or visit www.iitmetalfab.com today!

* Quick
* Affordable
* Precise
* No Minimums

Complete Fabrication Center

Integrated Ideas & Technologies, Inc.

Precision Laser, Waterjet, Plasma, Machining, Micro-Machining, Forming, and Welding Capabilities

3896 N. Schreiber Way • Coeur d’Alene, ID • 83815-8362 • USA
Ph (208) 665-2166 • Fax (208) 665-5906 • www.iitmetalfab.com

1,700+ Products for the Hobbyist, Inventor, & Engineer
Free Forums & Resources
www.DesignNotes.com

Aluminum & Plastic Project Cases
As Low As $5.09!

Connectors & Adapters
As Low As $0.85!

Test Equipment
USB PC 2 CH 60 MHz Oscilloscope
Includes 2 Probes!
For Only $329.99
Includes a FREE GIFT!
PCSU1000

100's of Kit Projects
Remote Control by Telephone
Only $58.95!
K6501

DesignNotes.com
Affordable Prototyping Products
Toll Free
1-800-957-6867
15 Day money Back Guarantee!
DesignNotes.com, Inc
2014 Ford Road, Unit B, Bristol, PA 19007

NUTS AND VOLTS
It's here! The 2007 CD Rom. Also the complete 2006, 05, 04 Nuts & Volts Magazine. Stored as PDF's, you can print, search and easily store your digital magazines.
Only! $24.95
To order, go to: www.nutsvolts.com or call 1.800.783.4624
Buy 2 or more CD's and pay only $21.95 each.
NUTS & VOLTS MAGAZINE

For 3 $51 PCBs
FREE Layout Software!
FREE Schematic Software!
01 DOWNLOAD our free CAD software
02 DESIGN your two or four layer PC board
03 SEND us your design with just a click
04 RECEIVE top quality boards in just days
expresspcb.com

The Serial Port is Dead! Long Live the Serial Port!

USB Serial Port Breadboard Experiments with the FTDI FT232R

by Joe Pardue

In ancient times, when the King died the people shouted, "The King is dead — long live the King!" to acknowledge the passing of the old regime and to welcome in the new. You may have noticed the demise of the old serial port King and its replacement by the USB usurper. If you have used the RS-232 serial port to work with embedded systems, you likely mourn the old King and tend to think of the new King (USB) as something of a tyrant — or at least very hard to figure out and use. But with the advent of USB-to-serial adapter ICs such as those from SiLabs and FTDI, we have something to celebrate, and we can shout, "The serial port is dead — long live the serial port!" We can now use our old methods and not have to learn a thing about USB other than how to plug in the cable.

In this article, we will look at the FTDI FT232R USB UART IC mounted on a small PCB — the BBUSB. This board lets us use USB as an old style serial port on a breadboard. As a bonus, we will be able to do general-purpose Input/Output with 14 lines of the FT232R in the bit-bang mode. We will first learn to use BBUSB as a USB-to-serial port converter talking to a PC with a simple terminal program. Next, we will learn about the bit-bang mode and how to use the FT232R to read switches, light LEDs, and finally, we will build the "World's Smallest Moving Message Sign" using a single seven-segment LED. The executables for all the software used in this article may be downloaded for free from **smiley micros.com** or from the *Nuts & Volts* website (**www.nutsvolts.com**). The source code for the Simple Terminal program is also available for free, written in both C# and Visual Basic .NET Express Editions.

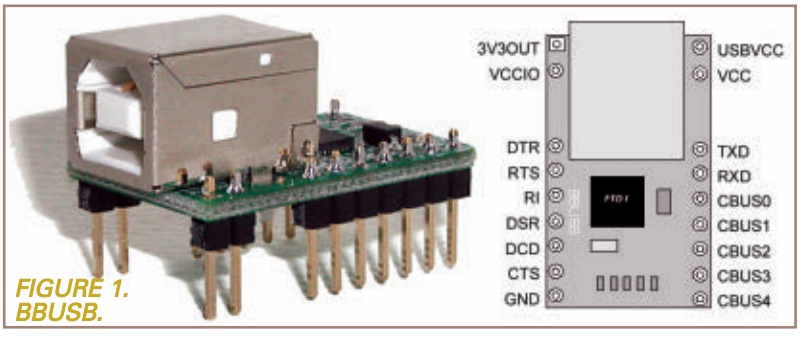

FIGURE 1. BBUSB.

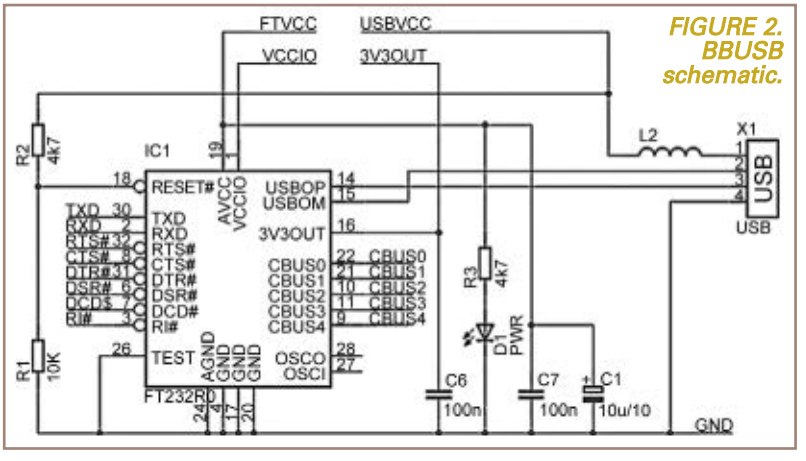

FIGURE 2. BBUSB schematic.

Using the BBUSB and Simple Terminal

In Figure 1, we see the Smiley Micros BBUSB and layout with pin names. In Figure 2, we see the BBUSB schematic that shows the components and wiring used.

Using USB Bus Power

The USB bus can provide up to 500 mA power to a USB device, but certain rules must be

followed. Violating the rules can result in your PC assuming a USB bus power fault and the PC will then shut down (no warning, just a black screen and bye-bye to all your unsaved work — this is not an official fact, but a personal observation). Save your work frequently when playing with these devices and be prepared to reboot your system.

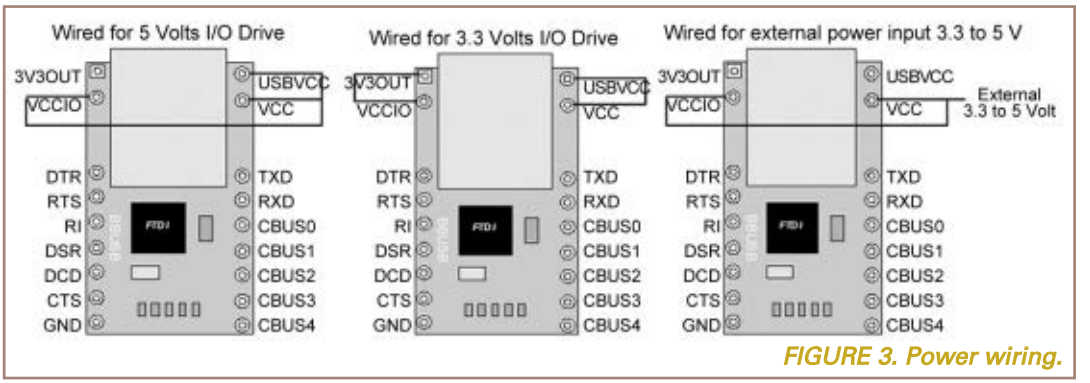

FIGURE 3. Power wiring.

The USB peripheral tells the USB host how much power it needs in 100 mA units up to 500 mA. It cannot use more than 100 mA while starting up before making a request for more power. And the USB host can deny the peripheral's request for more power. Also, if the USB host tells the peripheral to go into suspend mode, it must not use more than 500 µA. This can get complex. For instance, a device off a USB bus-powered hub cannot use more than 100 mA, but you can have hubs with external power that can supply the full 500 mA. For this article, we will assume that the device is powered either directly from a PC or from an externally powered hub so that we can use up to 500 mA.

FIGURE 4. Loop Back test.

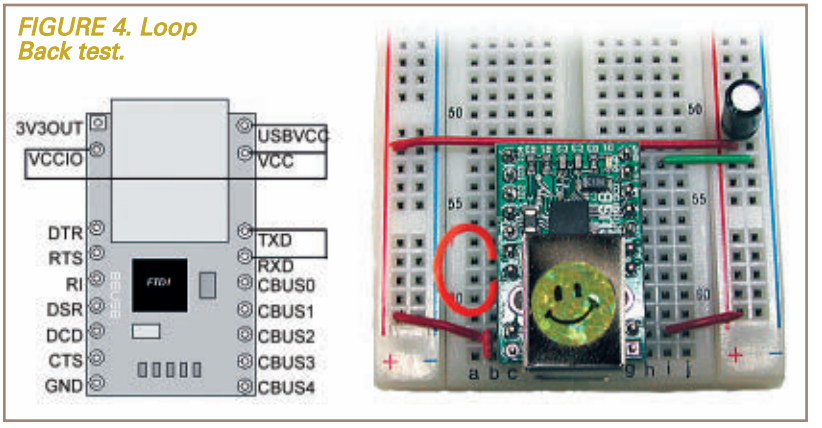

The BBUSB can be powered directly from the USB bus or it can be powered from an external power source. Figure 3 shows three ways to wire the BBUSB. First, you can use the five volts from the USB bus; second, you can use the BBUSB to convert the bus power to 3.3 volts to power other circuits on the breadboard; and third, you can use external power between 3.3 and five volts.

Using the BBUSB on a Breadboard

Before plugging the BBUSB into the USB port, you will need to download the CDM 2.00.00 (or the most recent version) drivers from **ftdichip.com/Drivers/VCP.htm**.

• Wire the BBUSB as in Figure 4.

• Plug a USB cable into your PC and the BBUSB.

• Windows will display a Found New Hardware Wizard, which will ask you "Can Windows connect to Windows Update to search for software?" Click the "No, not this time" radio button, then "Next>."

• The Wizard will then ask "What do you want the wizard to do?" Click the "Install from a list or specific location (advanced)" radio button, then "Next>."

• The Wizard will then ask "Please choose your search and installation options." Click the "Search for the best drive in these locations" radio button, then click the check box for "Include this location in the search."

• Click on the browse button to locate the directory containing FTDI's CDM 2.00.00 (or the most recent version) drivers. Click "Next>."

• In the final Wizard window, click "Finish." You will see a "Found

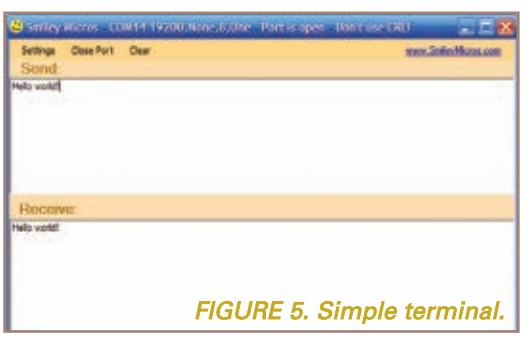

FIGURE 5. Simple terminal.

FIGURE 6. Port settings.

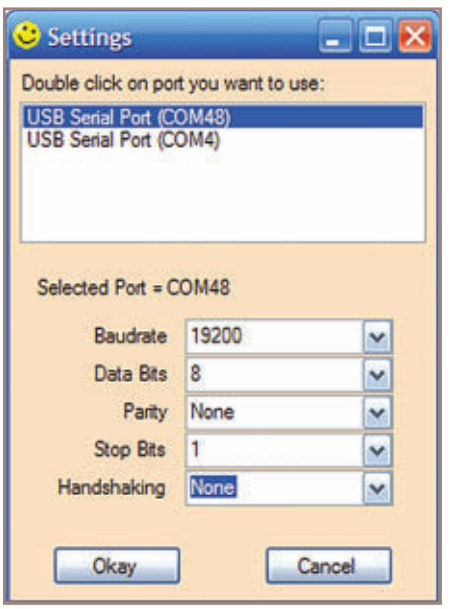

FIGURE 7. DB9 connector wiring.

Signal	DB-9
DCD	1
Rx	2
Tx	3
DTR	4
SG	5
SR	6
RTS	7
CTS	8
RI	9

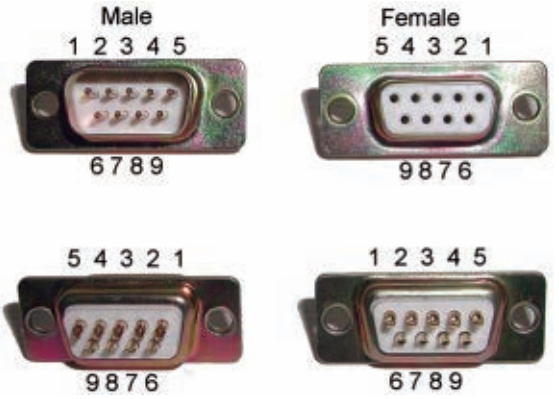

New Hardware" balloon pop up for a moment.

• Surprisingly, the Wizard will reappear and you will have to repeat the entire process since two drivers are installed.

With the hardware set up as shown and the drivers loaded, you can now do your loop back test with a terminal program such as HyperTerminal or the Simple Terminal, which follows.

Using Simple Terminal

You can find Simple Terminal in the downloads section of **smileymicros.com**.

• Plug your USB cable into your PC and the BBUSB, following the previous instructions to install the FTDI drivers.

• Browse to the directory where you downloaded SimpleTerm.exe and click on it. You should see the form shown in Figure 5.

• Click the "Setting" menu item and you should see the Settings form shown in Figure 6, which will list all your serial port devices. In this case, we select COM10. Your case will probably be different. If you have multiple choices and aren't sure which to choose, unplug your BBUSB, then look at the Settings again to see which one disappeared. Then, plug it back in and select that port.

• Select the device and the baudrate, and then click the Okay button.

• Type 'Hello world!" into the Send window and you should see 'Hello world!' appear in the Receive window.

• Now you know the hardware and software work.

USB RS-232 Level Conversion

FIGURE 8. RS-232 voltage level conversion.

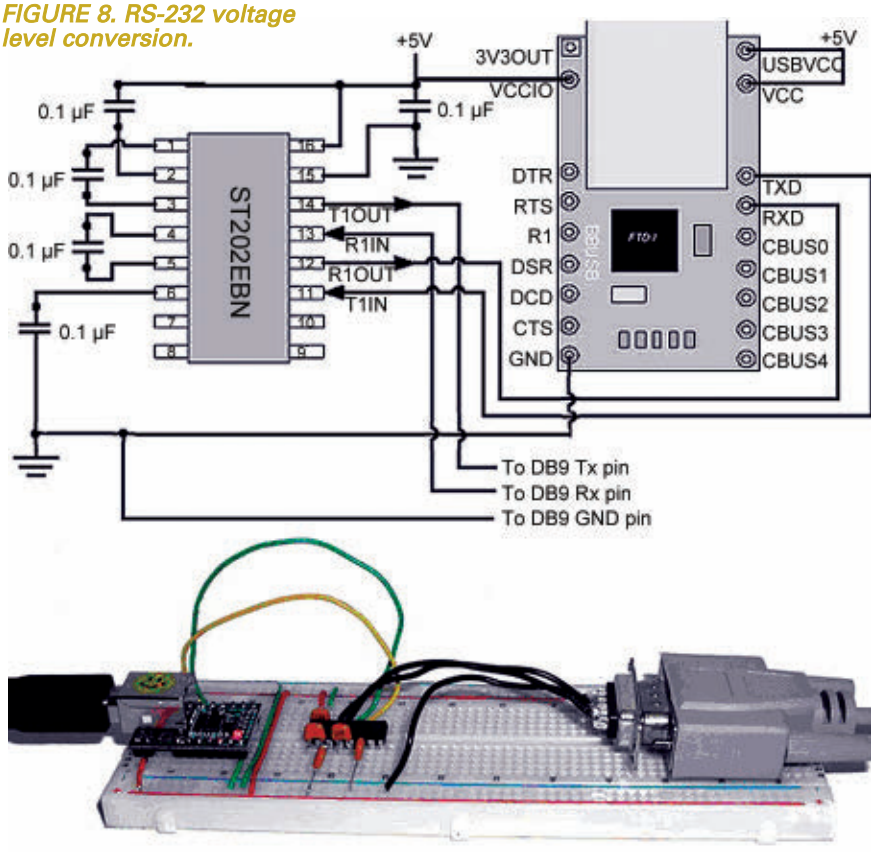

Let's create a USB to RS-232 converter on a breadboard that functions exactly like a pre-made USB to RS-232 converter cable. Why would you want to go to the trouble of building one on a breadboard when you can buy one already made for about the same price as rolling your own? Good question, and about all I can say is that this way, you learn how that cable works and get the opportunity to use the extra pins on the BBUSB for other projects. You also get the opportunity to make a dozen frustrating mistakes and do a lot of debugging (but that's part of the fun, isn't it?). Figure 7 shows the pin-outs of the two ends of an RS-232 cable. We will use a Null Modem cable, meaning that the RxD and the TxD lines cross so that the TxD of one end goes to the RxD of the other. This just means that what you transmit from one device is what you receive on the other device.

We are using an ST202EBN (or a MAX202EBE or similar compatible IC), RS-232 voltage level converter. Since this project is kind-of hard to wire properly, I built this on three separate

FIGURE 10. Bit-bang test.

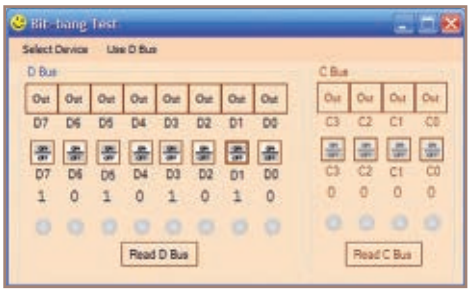

occasions and each time I spent some frustrating time debugging. Twice I mis-wired it, and once it didn't work for an hour, then just started working almost as if influenced by my progressively foul language. (Breadboards are fun!) The following instructions refer to the schematic shown in Figure 8.

• Wire the ST202EBN level converter using the diagram shown in Figure 8.

• Place the BBUSB and the ST202EBN on the breadboard more or less as shown.

• Wire BBUSB for +5V
  – Wire USBVCC to VCC
  – Wire VCC to breadboard +5V
  – Wire VIO to breadboard +5V
  – Wire GND to breadboard GND

• Add the five 0.1 µF caps to the ST202EBN as shown. Trim the legs to get the caps near the board.
  – Cap between +5V and GND, near pins 15 and 16.
  – Cap between +5V and pin 2.
  – Cap between pins 1 and 3.
  – Cap between pins 4 and 5.
  – Cap between pin 6 and GND.

• Wire TxD of BBUSB to pin 11 of the ST202EBN.

• Wire RxD of BBUSB to pin 12 of the ST202EBN.

• Wire the DB9 pin 3 (TxD pin) to pin 14 of the ST202EBN.

• Wire the DB9 pin 2 (RxD pin) to pin 13 of the ST202EBN.

FIGURE 12. Bit-banging LEDs breadboard.

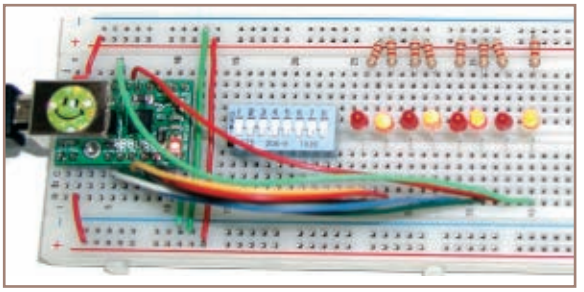

FIGURE 9. BBUSB D bus and C bus.

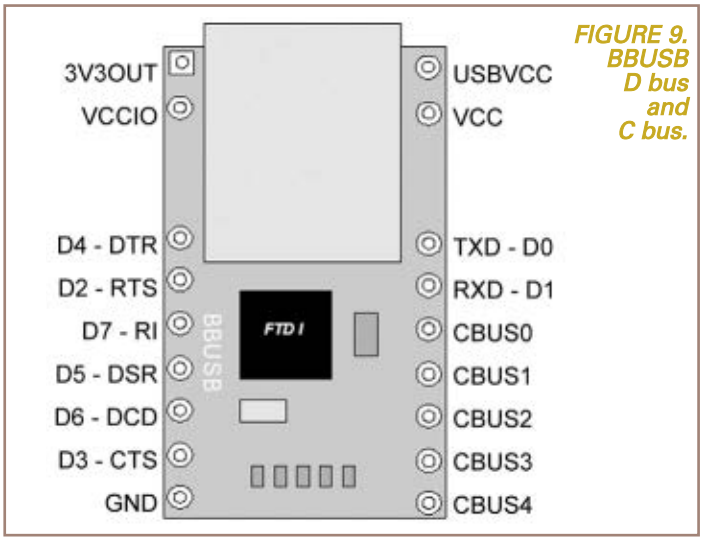

Wiring this thing up correctly is harder than it appears, isn't it? You can test this if you have a computer with both a USB port and an RS-232 port. Attach both devices and open two instances of Simple Terminal, then open one port in one instance and the other in the second one and begin communicating. This is pretty hard to wire up correctly, so be patient with your debugging efforts.

Bit-bang Reading Switches and Lighing LEDs

Despite the markings on the BBUSB, those pins

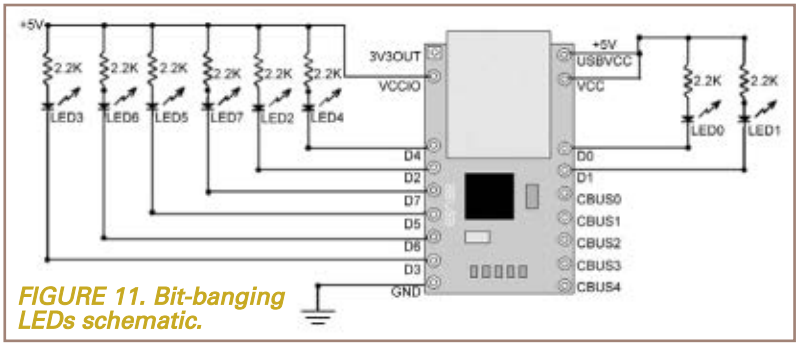

FIGURE 11. Bit-banging LEDs schematic.

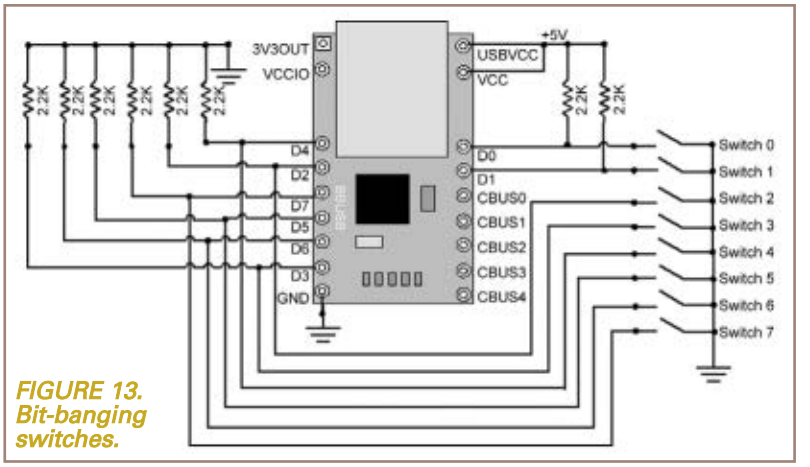

FIGURE 13. Bit-banging switches.

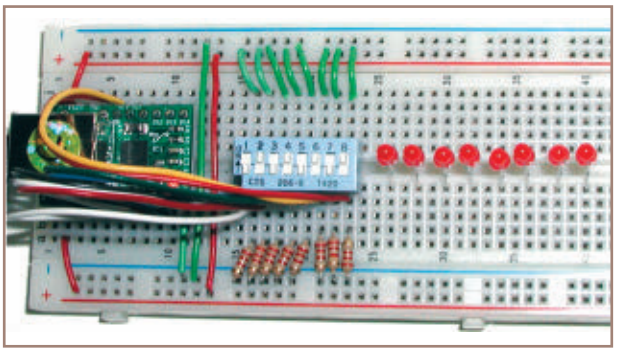

FIGURE 14. Bit-banging switches breadboard.

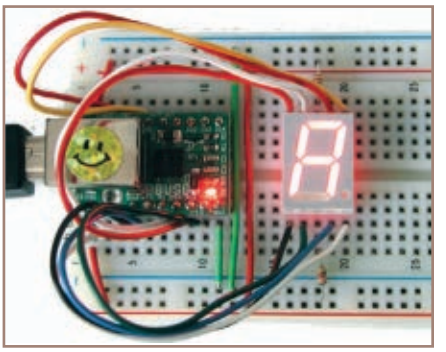

FIGURE 15. World's smallest moving message sign.

You can find the Bit-bang Test software shown in Figure 10, in the downloads section of **smileymicros.com** or on the *Nuts & Volts* website.

lead a double life as shown in Figure 9. The D bus pins all have modem pin aliases that they use when sneaking around in the underworld of serial communications, but for these experiments, we will use the D bus names D0 to D7. Note that the pins are scattered about in no logical order. This wasn't done just to confuse you. (Really.)

FIGURE 16. Seven-segment test program.

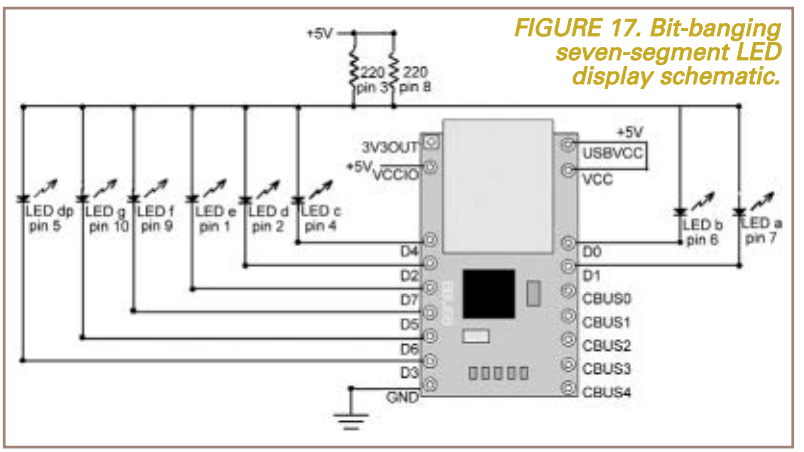

FIGURE 17. Bit-banging seven-segment LED display schematic.

Bit-bang Output

We will test bit-banged output using LEDs that have their anodes tied to Vcc via 2.2K resistors and their cathodes tied to a FT232R pin as shown in Figure 11 and Figure 12. When the pin is high, no current flows and the LED is off. When the pin is low, current flows and the LED is on. The fun starts when we try to remember the true/false logic of which bit state is low and which is high. The D bus on state is low and the C bus on bit state is high.

Output on the D Bus

On a breadboard, place a BBUSB, eight-positon DIP switch, eight LEDs, and eight 2.2K ohm resistors as shown:

Open the Bit-bang Test program and use the 'Select Device' menu item to open the BBUSB. Make sure all the top buttons are set to 'Out.' Now, if you've done everything right, the outputs will change when you click on the virtual switches.

You can wire and test the C bus exactly as you did the D bus, but note that you cannot use both busses for general bit-banged I/O at the same time.

Bit-bang Input

Before beginning this, note that the eight-position DIP switch is numbered left to right (1, 2, 3, 4, 5, 6, 7, 8) but we will ignore those numbers and think of it as a binary sequence with the least bit on the right and thus numbered: 7, 6, 5, 4, 3, 2, 1, 0.

We will wire the pins to a 2.2K resistor to ground and to the switch that when closed will connect the pin directly to ground.

Input on the D Bus

Rewire the breadboard according to Figure 13 and Figure 14.

In the Bit-bang Test program, click on all the buttons on the top row of the D bus group box to convert each pin to an input – the button will change from 'Out' to 'In.'

As stated before, you can wire and

Parts List

ITEM	SUPPLIER	P/N
■ Breadboard USB	Smiley Micros	BBUSB
■ Breadboard + wires	Circuit Specialists	CS WB-102+J
■ DB-9 male connector	Circuit Specialists	CS DP-09P
■ DB-9 female connector	Circuit Specialists	CS DP-09S
■ Red LED	Jameco	333171
■ Eight-Pos DIP switch	Jameco	38842
■ Seven-Seg LED	Jameco	335101
■ 2.2K ohm resistors	Jameco	690945
■ Max202 or equivalent	Jameco	142535
■ 220 ohm resistors	Jameco	690700
■ 0.1 µF capacitors	Jameco	544884
■ AWG 22 solid 9" wire	Jameco	36768

test the C bus exactly as you did the D bus, but note that you cannot use both busses for general bit-banged I/O at the same time.

The World's Smallest Moving Message Sign

Refer to the schematic in Figure 17 to wire up a breadboard as shown in Figure 15. You can download the software shown in Figure 16 to run this device from **smileymicros.com** or **www.nutsvolts.com**.

Not all the characters that show on a seven-segment LED are like those in the Latin alphabet. You will need to remember what K, M, W, X, and Z look like (see Figure 16). The rest look like the capital or lower case versions of the actual Latin version.

The Seven-Segment Test Program will also allow us to set or clear each segment, select a character to show from a font matrix, show the whole font one character at a time, output the classic 'HELLO WORLD' at the press of a button, and we can enter a string of characters up to 64 characters and have them scroll on the seven-segment LED by flashing each character in sequence. Some folks think you need to show at least six characters or so at one time and that to show a longer message, you need to scroll the characters. And while that is certainly easier to read, using one seven-segment LED will get the message across if the reader pays attention and accepts a few non-standard characters.

Conclusion

As you can see from this article, you can do a lot with the FTDI FT232R IC on a printed circuit board designed to be used on a breadboard. If you want to go deeper with the device and the programs shown in this article, **smileymicros.com** and **Amazon.com** have the book: *Virtual Serial Port Cookbook* (414 pages) to help you learn much more about .NET programming with the serial port class; how to write a full-featured Developer's Terminal; how to write the programs shown above; and more details on how to use the FT232R for 14 I/O lines in bit-bang mode. **NV**

Note

Smiley Micros carries the hardware kits for the projects shown in this article.

Joe Pardue can be contacted via email at nv@smileymicros.com. He has a BSEE and operates **www.smileymicros.com** from the shadows of the Great Smokey Mountains in Tennessee. In addition to the *Virtual Serial Port Cookbook*, he is also the author of *C Programming for Microcontrollers*.

Exclusively at Jameco... The Lowest Prices... Guaranteed!

Save 3% to 5%
Looking to save on thousands of Name Brand components? Jameco offers these popular products for 3% to 5% below market price, and we guarantee it!

Save 15%-25%
Save more when a specific manufacturer is not required. Major Brand semi's are sourced from 5-6 specific major manufacturers, plus we also offer Jameco Brand and Generic passives for even greater savings.

Save 30% or more!
Looking for killer deals? Jameco buyers often find Factory Overruns from some of the industry's biggest names. That means savings of 30% and more to you!

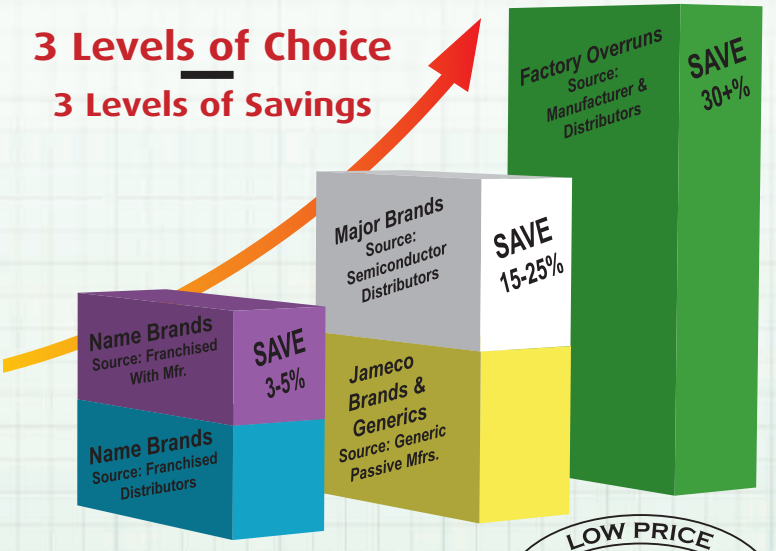

Other Jameco Advantages:

- We offer over 300 Major Manufacturers
- ***99%*** of catalog products ship the same day.
- Lowest prices guaranteed, or we pay 10%.

LOW PRICE GUARANTEE
If you find a lower print-advertised price for a product we offer, just let us know. We'll offer you that product for 10% less than the price you found, right down to our cost!

JAMECO ELECTRONICS

Order 24 hours a day, 7 days a week
www.Jameco.com
Or call 800-831-4242 anytime

SEMICONDUCTORS • PASSIVES • INTERCONNECTS • ELECTROMECHANICAL • POWER

Cell Phones Blamed for Poor Spelling, Survey Says

Cell phones have been blamed for car crashes, cancer, and boorish behavior. People now blame cell phones for their poor spelling.

A recent survey by WhiteSmoke, Inc., revealed that most adults can't spell everyday words. When asked why, 68% of the 2,500 randomly-selected participants claimed technology was to blame — particularly mobile phone predictive spelling and text speak abbreviations.

Apparently using CUL8TR (for see you later) contributed to 38% of people forgetting how to spell definitely and accommodate. Likewise, 40% could not spell questionnaire and nearly a third were stumped by liaison. This is according to the research conducted by WhiteSmoke — developers of a turbocharged writing engine that relies on patented language processing to check spelling, grammar, and punctuation in context (**www.whitesmoke.com**).

Despite dismal spelling skills, the survey revealed that only 59% of adults age 18-60 bother to use their spellchecker before hitting their email send button. "Surprisingly," noted Amit Greener, vice president of sales and marketing for WhiteSmoke said, "A third of adults questioned regard their spelling skills as excellent and another 46% claimed their spelling was good."

Even receive was misspelled by 15% of respondents who likely forgot the lesson covering, "I before E except after C" and calendar left 19% of the participants scratching their heads, according to the software firm headquartered in Wilmington, DE, whose product enhances writing by suggesting synonyms, adjectives, and adverbs.

You can test your spelling against the WhiteSmoke Survey Participants with the following spelling quiz or online at **www.whitesmoke.com**.

Correct answers and percentage of errors appear on page 107.

1) Calendar Calender Calandar

ELECTRONET

go to www.nutsvolts.com click Electro-Net

HOBBY ENGINEERING
Kits, Parts, Tools and Books
www.HobbyEngineering.com

Sheet Metal Fabrication
Complete Fabrication Center
Integrated Ideas & Technologies, Inc.
Precision Laser, Waterjet, Plasma, Machining, Forming, and Welding Capabilities
www.iitmetalfab.com

Pololu
Robotics & Electronics
6000 S. Eastern Ave. 12D, Las Vegas, NV 89119
www.POLOLU.com 1-877-7-POLOLU
Motor & servo control
Robot controllers
Gearboxes & wheels
Robot kits
Custom laser cutting
Solder paste stencils

Get 5 PCBs for $13.00 each!
PCB Assembly Available!
Order Online
www.pcbfabexpress.com
PCB FAB EXPRESS

ELECTRONIC GOLDMINE
NEARLY 5000 ITEMS
WWW.GOLDMINE-ELEC.COM
WE HAVE THE ELECTRONIC COMPONENTS YOU ARE LOOKING FOR AT DISCOUNT PRICES

A new era of secure RF
www.CipherLinx.com
CipherLinx Technology

paia.com
Electronic Music Kits and More
Music/Tutorials/Kits
Analog Synthesizers
Guitar Effects
Tube Electronics
Studio Gear

EMULATE A USB KEYBOARD, MOUSE, AND JOYSTICK FROM YOUR OWN SWITCHES!
MODEL KE-USB108
HAGSTROMELECTRONICS.COM

2) Embarrass Embaress Embarass
3) Necassary Necessary Neccessary
4) Accomodate Accommodate Acommodate
5) Separete Separate Seperate
6) Occured Occurred Ocurred
7) Existance Existence Existance
8) Liaision Liason Liaison
9) Definitely Difinately Definitly
10) Ocurence Ocurrence Occurrence
11) Questionairre Questionaire Questionnaire
12) Referring Refering Refferring

New Self-Destructing Instant Messaging Technology Unveiled That Provides Users Privacy and Security

BigString Corporation has unveiled a new self-destructing instant messaging technology that enables users to send instant messages (IMs) that self-destruct after being sent. Additionally, IMs sent via BigString's service cannot be copied, logged, or screen-printed. BigString IM is a free, advertising supported service available at **www.bigstring.com**. It is offered as a web version or as a free plug-in for AOL's AIM.

The patent-pending technology leaves no trail or copy of the IM on any server once the message self-destructs. The time for self-destruction is set by the sender, and can be set to disappear in as little as a few seconds to over an hour. The sender can also choose a number of visual effects for the self-destruction. A message will disappear in real time simultaneously from both the sending and receiving IM screens.

"We have become so complacent about texting, chatting, and gossiping online that we have forgotten that our conversations might be stored and archived forever. Just ask a politician like New York Governor David Paterson, a celebrity like Charlie Sheen, or the American Idol contestant whose private pictures were spread around the Internet against her will. That's why we created an application that now gives consumers back their privacy and control," said Darin Myman, President and CEO of BigString. He added that, "Going BigString' gives you the ability to have a private and secure online conversation with the peace of mind that it will disappear at the exact time you chose."

Recent surveys indicate that over 70% of Internet users use some form of IMing with over 25% using a form of IM at work. "This makes the secure concept of 'Going BigString,' a natural for all those communicating in real time online," stated Mr. Myman.

ROBOGAMES

World's Largest Robot Competition
-Guinness Book of Records

North America's Top Ten Geek Fests
-Wired Magazine

SportCenter's Top Ten
-ESPN SportsCenter

"If you are a robot enthusiast, I would definitely encourage you to attend the RoboGames... Take a plane, train, space elevator, but definitely go!"
-SERVO Magazine

"Impossible to Imagine, Impossible to Forget!"
-Robot Magazine

Compete at RoboGames 2008!
Last year, over 1000 builders from around the world brought over 800 robots to San Francisco, in the 4th annual international event. This year, we expect even more robots and engineers to compete. Be one! With 80 different events, there's a competition for everyone - combat, androids, sumo, soccer, Lego, art, micromouse, BEAM, or Tetsujin! More than half the events are autonomous. Even if you just come to watch, you'll be overwhelmed with the diversity.

Last year, RoboGames hosted teams with over 800 robots from Argentina, Australia, Austria, Brazil, Canada, China, Colombia, Czech Republic, Denmark, Germany, India, Indonesia, Iran, Japan, Korea, Mexico, Netherlands, Peru, Singapore, Slovenia, Sweden, Taiwan, UK, and the USA.

Be a RoboGames Sponsor!
RoboGames is the world's largest open robot competition - letting people of any age, gender, nationality, or affiliation compete. Sponsoring RoboGames not only helps more people to compete, but also gets your company unrivaled press coverage and visibility. The event has been covered by CNN, ESPN, Fox, CBS, ABC, NBC (live), EBS Korea, NHK Japan, BBC, and countless print and web companies. Your logo can be everywhere the cameras turn!

Rent a Booth!
Booth spaces are at the front of the venue, ensuring lots of traffic. With 3000-5000 people each day, you're company will get amazing traffic!

Events:

Combat: 340 lbs, 220, 120, 60, 30, 3, & 1 lbs

Androids: Wrestling, Demonstration, Stair Climbing, The Eagle, Door Opening, The Toss, BasketBall, Lift and Carry, Marathon, Obstacle Run, Penalty Kick, Dash, 3:3 Soccer, Weight Lifting

Open Events: Fire-Fighting, Robomagellan, Maze/MicroMouse, Walker Challenge, Biped Race, Robot Triathlon, Line Slalom, Ribbon Climber, Vex Open, Lego Challenge, Lego Open, Aibo Performer, Balancer Race, Best of Show, Bot Hockey

Sumo: 3kg - Auto & R/C, 500g , 100g , 25g, Humanoid

Robot Soccer: Biped 3:3 & 5:5 , Mirosot 5:5 &11:11

Junior League: Lego Challenge, Lego Open, Lego Magellan, Woots & Snarks, Handy Board Ball, BotsketBall, 500 g Sumo, 120 lb combat, Best of Show, Vex Open

Tetsujin (ExoSkeleton): Lifting, Walking, Carrying

Art Bots: Static, Kinetic, Bartending, Musical, Drawing

BEAM: Speeder, Photovore, RoboSapien Hacker

June 12-15th, 2008
San Francisco, CA
http://RoboGames.Net

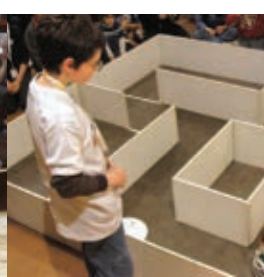

OvenFlow 1.0

A Program to Control SMD Soldering Using a Toaster Oven

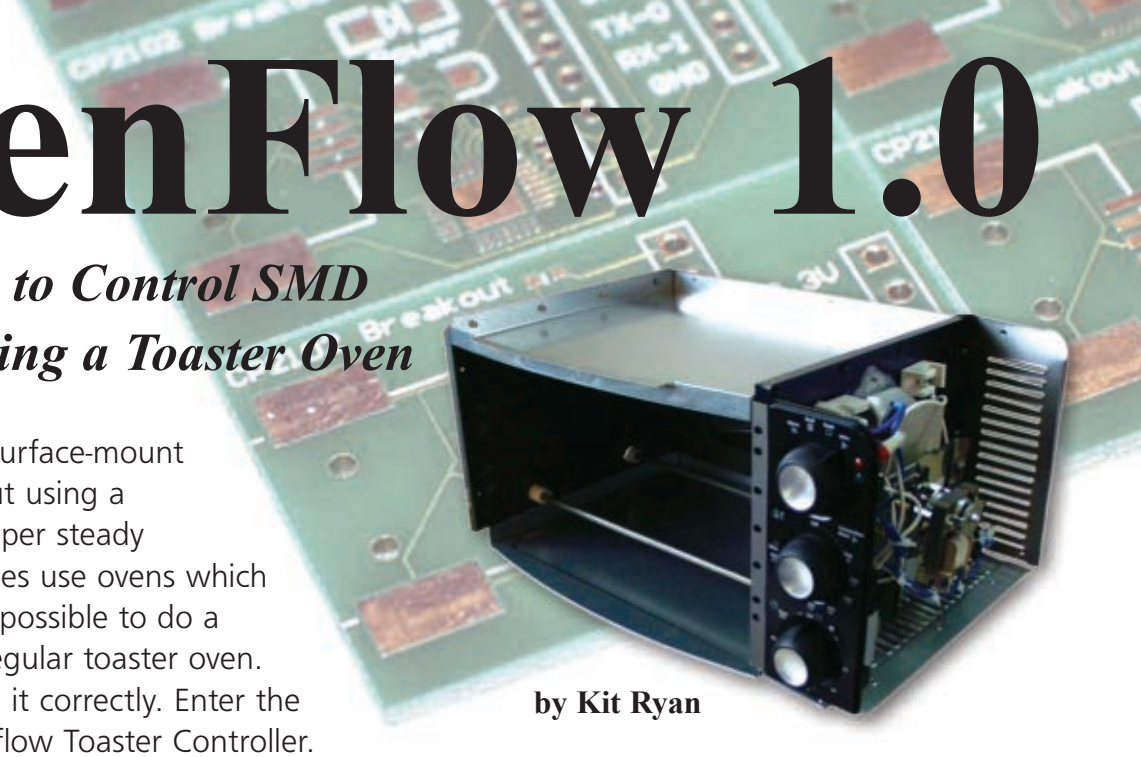

Ever want to try SMD (surface-mount device) soldering without using a magnifying glass and super steady hands? Production houses use ovens which cost thousands, but it's possible to do a reasonable job with a regular toaster oven. You just need to control it correctly. Enter the SparkFun Electronics Reflow Toaster Controller.

by Kit Ryan

This controller looked like a great project for experimenting with reflow soldering SMD devices at home, but it came with only rudimentary software. As a learning project, it had many features to explore, including a PIC16F88 MPU, thermocouple temperature sensor using the A/D converter, control buttons for inputs, an LCD readout, and a serial port with boot loader for quick program changes. A personal goal was to get back to low level (near assembly code) programming after decades of being out of touch. Many months and 1,500 lines of C code later, this little controller can really do a lot, including programmed modes and data logging to your PC.

Getting Started

The controller hardware kit is a snap to build — well packaged components and no SMDs (!). It even includes a power supply. All you need is a serial cable to hook it up to your PC for programming as shown in Figure 1. A feature of this kit is that the PIC16F88 already comes loaded with a boot loader so a real programmer isn't immediately needed — but more on that later. The kit powers up with the LED flashing and the LCD readout showing "Spark Fun." Very reassuring that everything works.

The circuit, shown in the schematic in Figure 2, is designed to control a relay that can switch 120 VAC for regulating the temperature of an ordinary toaster oven. How it works is that the thermocouple output is amplified and linearized by the Analog Devices AD849 IC to within ±2 degrees F. No adjustment is needed and I found it to be within one degree of the reading compared to room

SAFETY NOTICES

1) This project involves line voltage connections which are potentially fatal if mishandled. Double-check all wires before applying line voltages.

2) Using the Controller for reflow soldering can result in operating a toaster oven at extremely high temperatures, which can burn fingers or cause fires.

3) Solder materials, whether lead-based or lead-free, can be toxic if ingested. The toaster oven you use for this project should be permanently dedicated to electronics and no longer used for heating food products.

PLEASE USE CAUTION WHEN OPERATING THIS CONTROLLER.

FIGURE 1. Completed controller project.

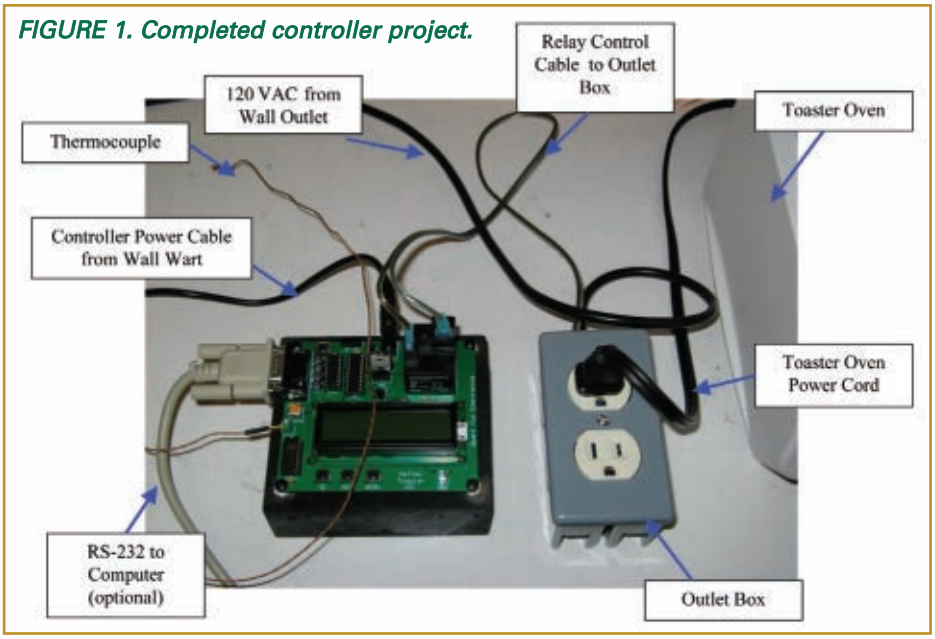

thermometers. The analog signal is between the range of 0 to +5 volts and fed to one of the PIC port pins to be sampled and converted to a 10-bit digital value. The result is converted into a three-digit display and sent to the LCD readout.

Board buttons labelled "Up," "Down," and "Select" are sensed by other PIC port pins and are used by the software to control the relay, temperature, and timer functions. One helpful feature of the 16F88 is that you can turn on "weak pull-ups" on its ports. This means the button inputs will read five volts when not pushed and zero volts when pushed without having to put extra "pull-up" resistors to the five volt supply. It's no wonder the board looks so simple! The power supply regulates the five volts for all the ICs. A MAX232 IC converts the 0 to +5 volt digital signals to and from the PIC to the standard ±12 volt RS-232 levels for interfacing to the PC.

Something not supplied with the kit is the AC outlet box seen in the picture. The relay wires are run to this box to switch the hot side of the outlets. An alternative that you may consider safer is to not mount the relay on the circuit board but put it inside the outlet box itself and just run the low voltage control signal back to the controller board. A significant amount of additional information on the hardware, the build kit, and boot loader software is available from the SparkFun website [1].

Simple is Okay; Complicated is More Fun

Toaster ovens can get up to over 500 degrees F — hot enough for SMD soldering. But heat alone is not enough. It takes the right time/temperature profile to melt the solder without destroying the parts or getting solder bridges in the process. A typical SMD heating profile is shown in Figure 3 (courtesy of Kester solder systems). Having a required profile was what drove the need for a "programmed mode." Since the PIC16F88 can write its own internal EEPROM memory to store a program, all the pieces were there for a really capable circuit!

The schematic is reproduced with permission from SparkFun Electronics. The BoostC header file is provided with permission from BoostSource Technologies. (The

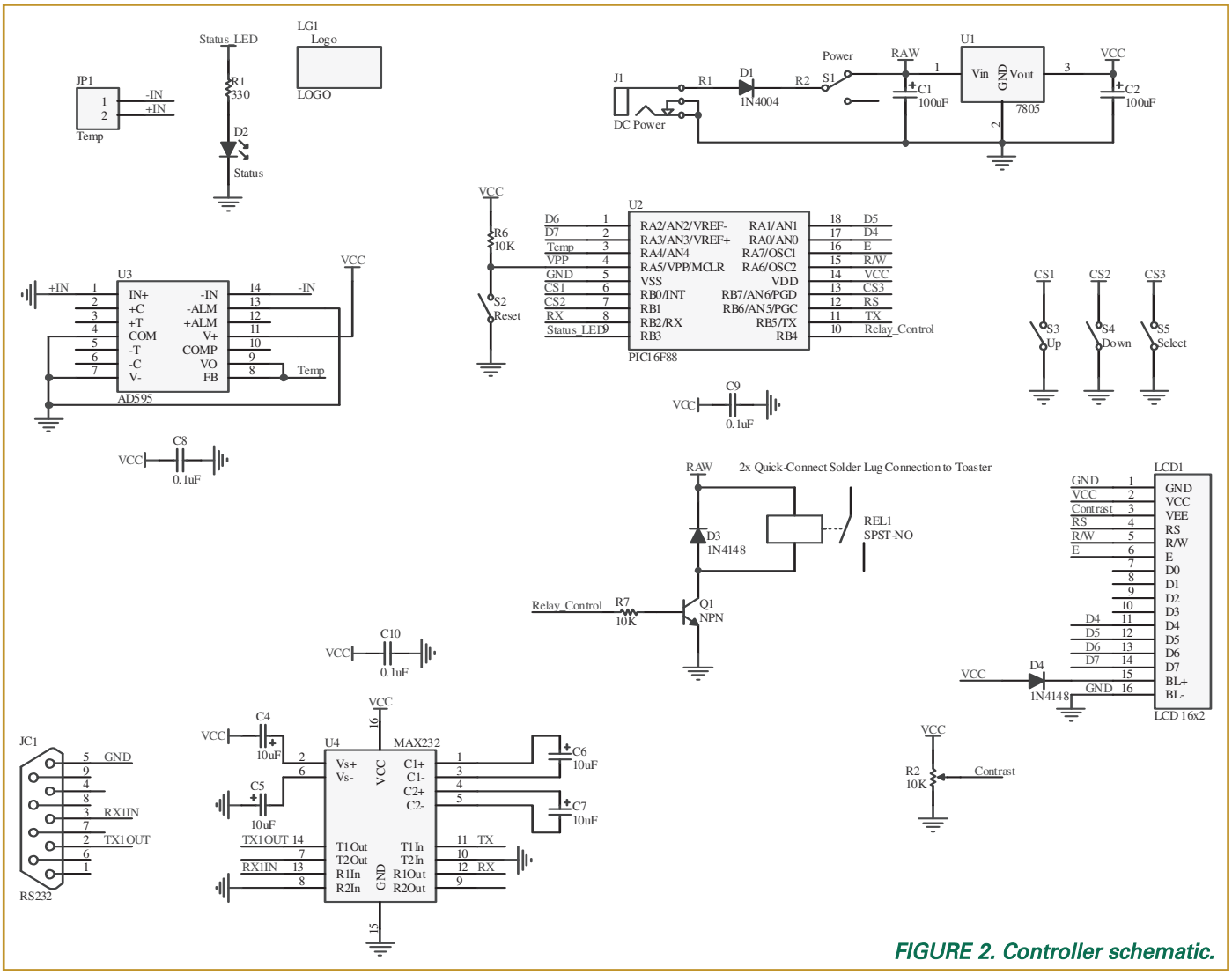

FIGURE 2. Controller schematic.

author is not affiliated in any way with either company.)

Controller Software

The software was developed to be more flexible than just controlling a toaster oven, should you want to apply it to other things. The original SparkFun software — which does have many useful basic code examples in it — has been heavily modified and expanded to get the resulting code described here.

The 4K memory limit of the PIC makes life really tough for getting sophisticated with the program. Every "extra" feature or line of code was scrutinized. Heavy use of functions (subroutines) was required to eliminate redundant code. The fact that only 200 memory locations are left out of 4096 is an indication of how tight it is. The user interface is further hindered having only 2x16 characters on the display and just three control buttons (there is a fourth button for reset only), however, a lot can still be done as seen in Figures 4 and 5.

The top line contains the settings for the current mode of operation and the second line shows the functions for the three buttons, marked "up," "down," and "select" on the PC board. Each button can have two functions, depending on whether a short push or long push (greater than two seconds) has been made. The slash mark "/" separates short/long functions.

A User Manual has been prepared which details all the capabilities and operating procedures. The modes are described briefly as follows:

1) Main Menu: This comes up first after the splash screen and allows the user to select one of the five operating modes. This is the basic "home" screen and always available when exiting one of the other modes. The only way to exit the Main Menu is to turn off the unit!

2) Manual: Has a stop watch and relay control plus displays the current temperature. The user can manually start/stop/reset the stop watch and turn the relay on or off directly. This mode is useful for calibrating the oven (or making toast).

3) Semi-Automatic: The user can set a temperature and the oven will track this temperature and turn the relay on and off automatically. This can be used for very long operations, such as chemical bath (e.g., etchant) temperature control for several hours.

FIGURE 3. Standard reflow solder profile.

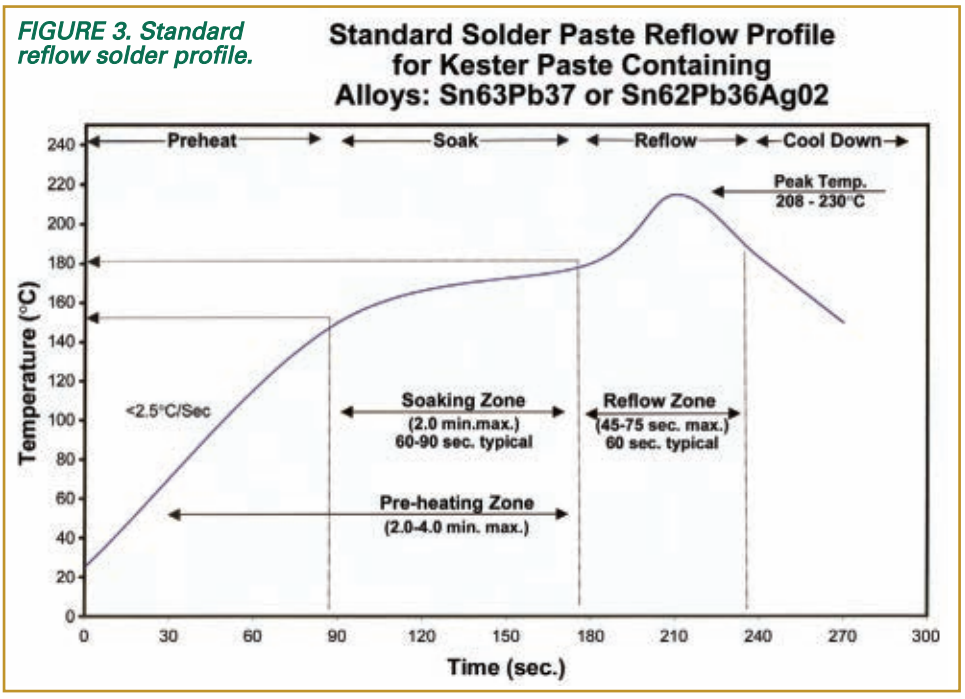

FIGURE 4. Main Menu LCD screen.

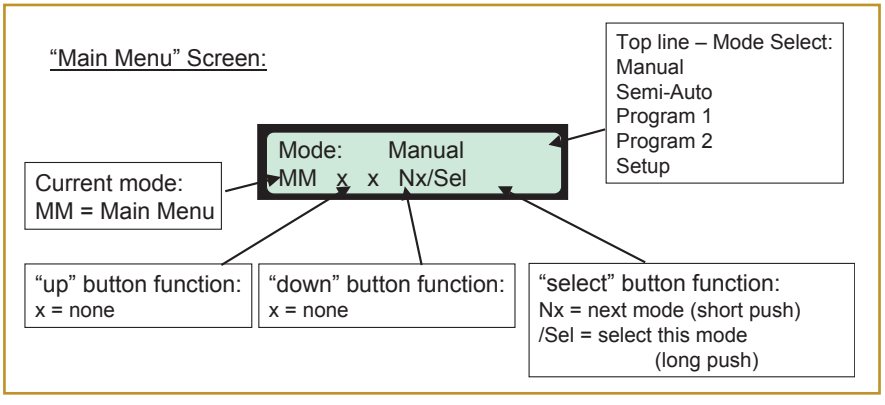

FIGURE 5. Program Mode LCD screen.

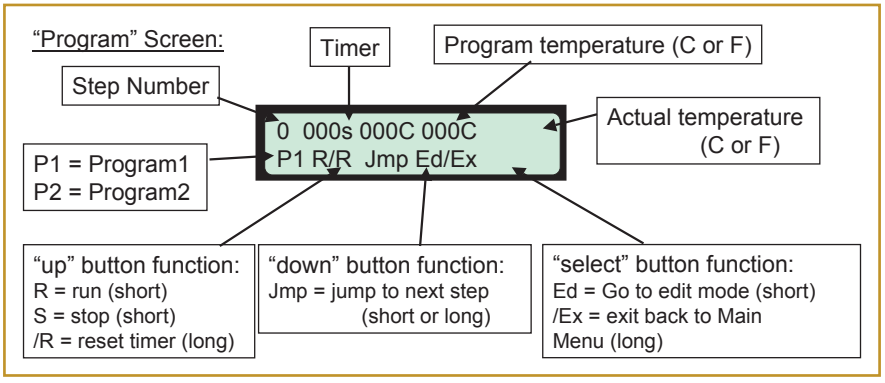

4) Program 1 and 2: This is the most capable mode of the software, permitting the controller to follow a time/temperature profile with up to 10 steps. Each step is programmable by the user and both the setting and the actual temperatures are displayed in real time. The software comes with a built-in profile similar to the Kester solder curve to make getting started easier. It can, of course, be modified. A nice feature of the programmer is that the steps for up to two programs are retained in the EEPROM on the onboard PIC16F88 after the unit is turned off. The LCD display for this mode shows how much information can be crammed into just 32 characters.

5) Setup: Five variables can be modified to tailor the controller to user preferences, including:

- Temperature units (Celsius or Fahrenheit).
- Time/temperature increment (during programming, the amount of change for each button push can be varied between one and 10 seconds or degrees).
- LED on with relay (gives a visual indication that the relay has been switched on; kind-of a safety feature).
- Clock calibration (allows a ± 2% change to the built-in system clock to get the one second timer as accurate as desired).
- Time constant (helps the control system compensate for the lag time in heating up the oven elements).

In addition, the controller program has a data logger function which will output the time, set temperature, actual temperature, and relay on/off conditions to your PC. Data points are sent once per second. It uses the built-in serial port on the board (a nice to have feature!) and is directly readable by HyperTerminal or similar programs. The data can be easily copied into Excel and analyzed or plotted, as seen in some of the plots in this article.

Software Tools Selection

Every programmer has to select tools and it's never an easy choice. Cost, complexity (including the learning curve), and capability are all factors. In selecting BoostC over CC5X — which seems to be the standard compiler in most articles — the cost differential of many $100s was important. As this was my first PIC programming effort, and not knowing whether I would like it or be successful or ever want to do it again, I opted for a very low cost entry into the process. It turns out that this compiler behaves very well, the cost is incredibly low, and there is excellent user support through the forums. I could often get a response to a question back in 24 hours from the creator of the compiler. I didn't come across a single bug either, although a few features could be improved, such as error messages. It also integrates right into the Microchip MPLAB IDE, too, for a consistent programming environment. For those of you who want to tweak the code with another compiler, there are several things which must be changed globally, including: using small letters for all the register names; changing the way binary numbers are entered; and, of course, pragma usage.

The boot loader from SparkFun proved to be more problematic. It worked perfectly over the serial port during the early days of program development, when I was making tons of stupid mistakes during the learning process. However, when the program size became larger than 2K (which is half of what the PIC16F88 can accommodate), the process went "tilt." There are some peculiarities in the way the PIC programs jump to addresses above 2K that are incompatible with the SparkFun boot loading scheme. Luckily, by that point, my programming skills had improved and I could use my ICD2 clone to directly burn-in the program changes to the PIC. It was not as onerous as I had originally thought, taking only about 30 seconds for a complete remove/burn/re-install cycle.

Cooking Right Along

To start, I suggest trying out the oven in Manual Mode; just switching the relay on and leaving it there for perhaps four minutes. Use HyperTerminal to collect the serial data output and plot the heating characteristic. First try, I ran into a problem before the temperature had peaked — the oven's thermal cutout safety switch clicked out at 220°C, just enough for regular solder to melt but not for lead-free RoHS work. I found that by adjusting the little metal tab on the temperature dial inside the oven cabinet, I could raise the limit to 250°C, which is enough. Of course, unplug the oven before taking screwdriver in hand!

The second attempt then

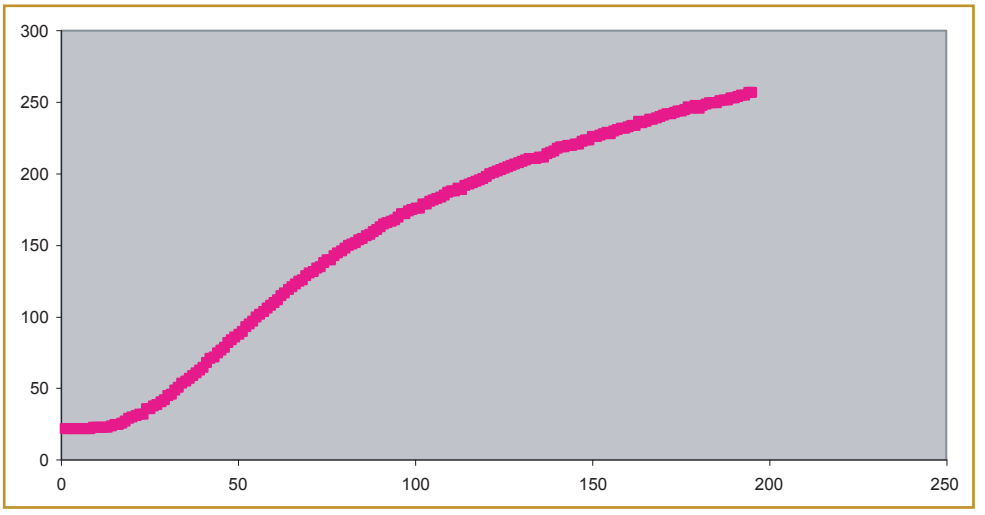

FIGURE 6. Toaster oven heating curve — Manual Mode.

looked like Figure 6. Notice there is a time lag while the elements heat up, then the slope increases nicely. The slope of the curve at any point is the "degrees per second" that the oven can heat. This is important since the slope of the desired curve needs to be able to match the soldering curve requirements. If you need more heating rate than the oven can produce, you're out of luck — and need to get a more powerful oven. My oven is a few years old, luckily, and has 1,550 watts, so it can get up to about two degrees C/sec. Many newer ovens come with only 1,200 watts and may have commensurately lower heating rates, although their insulation may be better. My suggestion is to go to yard sales and/or Craig's list and look for one with a high power rating. The toughest part of the curve to meet is at the top, when the oven is already quite hot but where it still has to climb quickly from about 180 degrees to 215 (lead-based solder) or 235 (RoHS) degrees in just 30 seconds, but the heating capability is at its lowest (least slope).

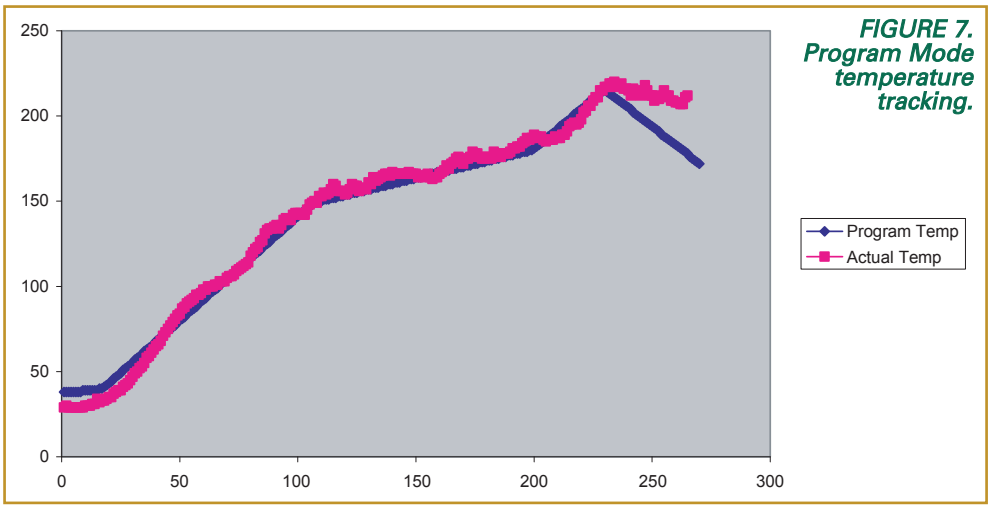

FIGURE 7. Program Mode temperature tracking.

Following the initial test, I then tried out the Program Mode using the built-in settings that approximate the Kester curve in five steps. If you allow for the warm-up period, which takes about 20 seconds, the tracking is quite good (see Figure 7; pink curve vs. blue curve). The plot actually shows the result of much "tuning" of the relay control algorithm compared to my original simplistic "turn on relay if the temp is below the program; turn off relay if it's above" approach.

The final algorithm looks ahead about six seconds to where the temperature needs to be — called the "set_temp" — and compares it to where the actual temperature appears to be headed: the "projected_temp." The weighting of the two values, the current temperature error, and the projected temperature error, can be adjusted to allow good tracking with different ovens. OvenFlow allows for a time constant variable which the user can adjust to help with the projected temperature function. The initial warm-up time lag is best adjusted by inserting a first program step of around 15-25 seconds at room temperature before trying to track the soldering curve. One interesting aspect of control loops (such as the one in the program) is their tendency to oscillate around the desired set point. Oscillations are clearly visible in the pink curve. However, since it's only a few degrees off at any point, it appears adequate for the SMD soldering function of interest. Another thing to be noted is the cool-off period at the end of the heating cycle, starting at about 230 seconds. Toaster ovens appear to have enough insulation — usually through a double skin of the oven itself — that they don't cool off very fast. According to the experts, the cool-down rate is important to get solder joints that are not too brittle. One way that can work here is to open the oven door in a controlled manner while watching the actual temperature fall.

Yes, But Does It Work?

The moment of truth had come. I took an old PC memory stick which has many surface-mount chips on it with close leads (0.68 mm spacing), and removed one of them using a heated air de-soldering tool. The back of the board had new, unused pads on it to which I applied liquid flux from a pen. Then I smeared on a thin layer of real solder paste evenly across the pads to be representative of what could be done at home without a custom cut solder paste stencil, put one of the chips back in position on the pads, and ran the controller program in the oven. The photo in Figure 8 shows an excellent solder joint with no bridges at all. The solder paste didn't stick to the masked and fluxed areas between the pins. I probably could have applied a little more solder paste. This is not to say the process is foolproof yet, but it looks like it can be made

FIGURE 8. Close-up of actual SMD soldering.

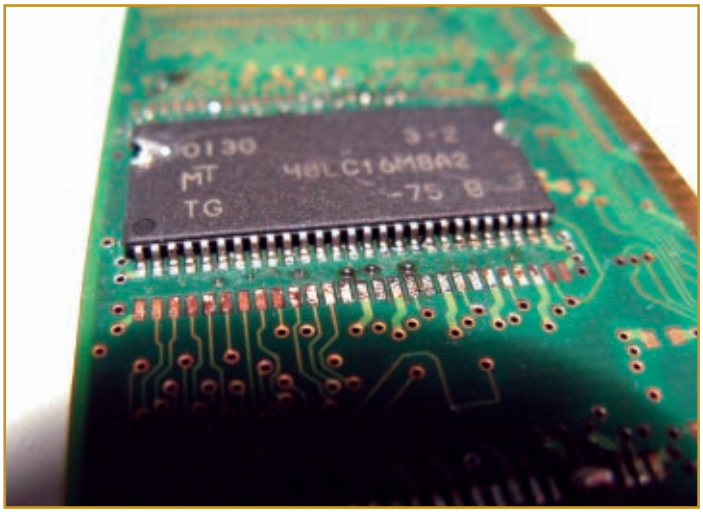

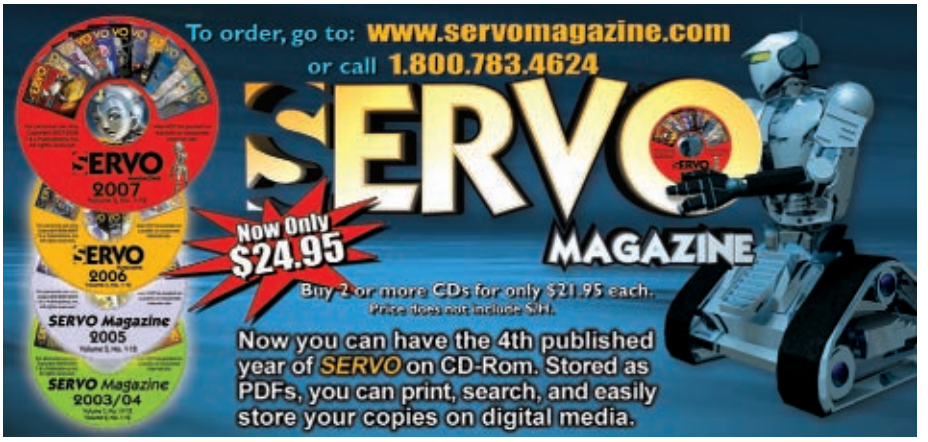

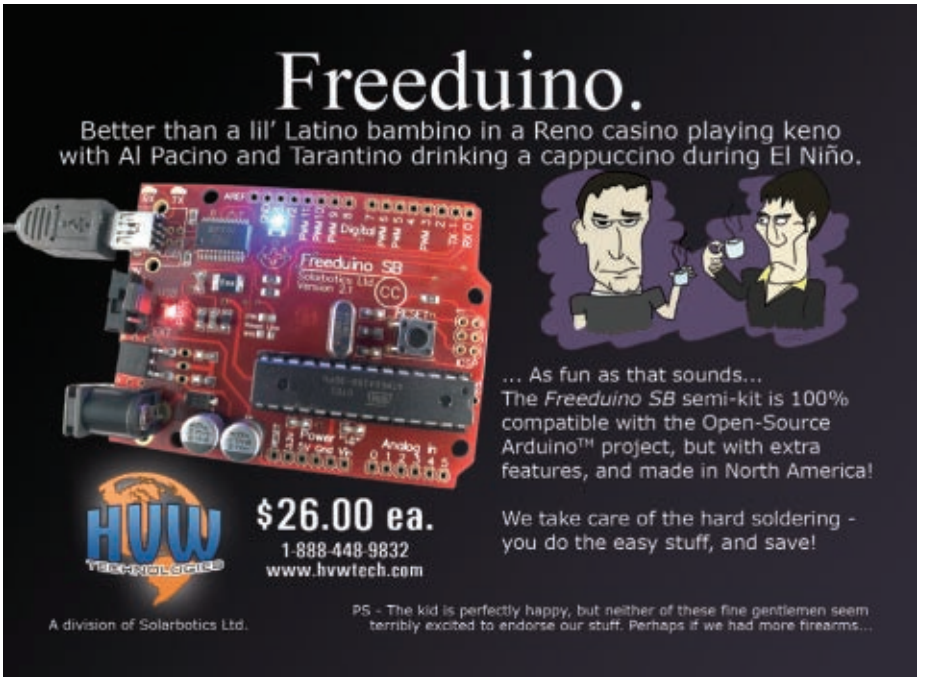

OvenFlow 1.0

to work with a little effort.

Do It Yourself

The hardware is obtainable from SparkFun Electronics and saves a lot of time compared to assembling your own circuit from scratch. If you do go it alone, just be sure to follow the schematic exactly and absolutely use a PIC16F88 MPU because every PIC is slightly different and the software will likely not work with another MPU. Add the outlet box and then download the software from the Spark Fun site. I've included two versions of the program there for your enjoyment: a .hex file that can be burned directly into the MPU using a programmer, and a C file and associated header files in case you want to play around with the program yourself. Do a search for "reflow" to find the controller info and files. Sorry, but there's no easy way around using a programmer unless someone comes up with a tiny bootloader that's compatible with the large program size. This particular MPU is actually designed for in-circuit programming but that feature is not built into the SparkFun kit and will probably require some circuit modifications to make it work. Even so, a programmer would still be required.

Also posted on the SparkFun website is a complete User Manual for the program that explains all the screens and control functions. That manual includes a more in-depth discussion of the software, too. Be aware that the PIC16F88 has only 4K of program memory and the program described in this article uses 95% of it! If you want to add more features, you'll likely have to cut something out. **NV**

REFERENCES

[1] SparkFun Electronics controller & software (**sparkfun.com**)

[2] Kester SMD soldering time/temp profile (**kester.com**)

[3] BoostC C compiler (**source boost.com**)

Seetron Serial LCDs

Interface a sharp LCD display to your BASIC Stamp® or other micro-controller project with ease. No-solder wiring harnesses and easy mounting kits available too. See www.seetron.com today.

- 3.2 x 1.4 in. supertwist LCD
- 2400/9600 baud serial
- Low (≈2mA) current draw
- Great with BASIC Stamps®

$45 BPI-216N

- 3.2 x 2 in. backlit LCD
- 1200-9600 baud serial
- Advanced protocol, 4 switch inputs
- EEPROM for configuration settings
- Favorite for OEM applications

$49 ILM-216L

- 3.2 x 1.4 in. graphics LCD
- 2400/9600 baud serial
- Font and 15 screens in EEPROM
- Easily draw points, lines, screens

$99 SGX-120L

- 3 x 2 in. supertwist LCD
- 1200-9600 baud serial
- ESD-protected, 4x4 keypad input
- Store up to 95 screens in EEPROM

$119 TRM-425L

Scott Edwards Electronics, Inc.
1939 S. Frontage Rd. #F, Sierra Vista, AZ 85635
phone 520-459-4802 • fax 520-459-0623
www.seetron.com • sales@seetron.com

More displays available, including bright VFDs. See www.seetron.com

Extreme Robot Speed Control!

Sidewinder

$399

- 14V - 50V - Dual **80A** H-bridges - 150*A+ Peak!*
- Adjustable current limiting
- Temperature limiting
- Three R/C inputs - serial option
- Many mixing options - Flipped Bot Input
- Rugged extruded Aluminum case
- 4.25" x 3.23" x 1.1"

$29.99

$79.99

$119.99

Scorpion Mini
- **2.5A** (6A pk) H-bridge
- 5V - 18V
- 1.25" x 0.5" x 0.25"

Scorpion HX
- Dual **2.5A** (6A pk) H-bridges
- Plus **12A** fwd-only channel
- 5V - 18V
- 1.6" x 1.6" x 0.5"

Scorpion XL
- Dual **13A** H-bridge *45A Peak!*
- 5V - 24V
- 2.7" x 1.6" x 0.5"

Introducing Dalf

- Closed-loop control of two motors
- Full PID position/velocity loop
- Trapezoidal path generator
- **Windows GUI for all features**
- Giant Servo Mode!
- PIC18F6722 CPU
- C source for routines provided

$250

H-bridges: Use with Dalf or with your Micro/Stamp

$219

OSMC
- Monster power!
- 14-50V **160A!**
- 3.15"x4.5"x1.5"
- 3 wire interface

$79

Simple-H
- 6-28V **25A!**
- 2.25"x2.5"x0.5"
- 3 wire interface
- current & temp protection

ROBOT POWER™
www.robotpower.com

MADE IN THE USA

Phone: 253-843-2504 • sales@robotpower.com

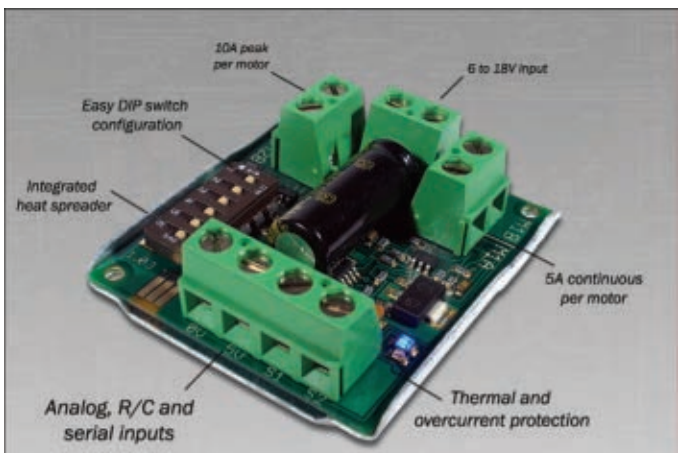

* Kitchen sink not included.

Sabertooth 2X5 $59.99

Dimension Engineering's latest motor driver can control the speed of two brushed DC motors in light weight robots. The versatile Sabertooth is packed with features such as regenerative braking and allows you to select between mixed mode or independent control depending on your project. An additional lithium mode protects expensive LiPo batteries. To read more about the Sabertooth 2X5, or for more information about our other feature-rich products, visit www.dimensionengineering.com

DimensionEngineering
www.dimensionengineering.com
899 Moe Drive #21, Akron OH
(330) 634 - 1430

Get 5 PCBs for $13 each

SEE OUR WEBSITE FOR OTHER OFFERS ON 2, 4, 6 LAYER BOARDS.

"$13 each" offer is valid for these specs:

PCB Assembly Available!

- 2 sided boards up to 10 sq" size
- FR-4, 0.062" thick
- 6 mils (0.006") trace width and spacing
- 15 mils minimum finished hole size
- As many drill sizes as you want
- Free Tooling, Soldermask, Silkscreen

Order Online at:
www.pcbfabexpress.com

PCBFABEXPRESS
One-stop PCB Fab & Assembly

email: support@pcbfabexpress.com
Phone: 408.522.1500

PCB BASICS: From Your Brain to a Finished Board

You've seen me do it most every month in *Nuts & Volts* and *SERVO*. I make them in two-layer form and I make them in four-layer form. I make them as prototypes. I make them as production quality. I identify them with silkscreen legends. I ruggedize them with soldermask. I make them large and I make them small. What is this thing I do that you see in Design Cycle and *SERVO* every month? The answer is easy. I create printed circuit boards.

by Fred Eady

When you have finished pouring over a *Nuts & Volts* Design Cycle project or one of my *SERVO* articles, you have the option of having the project's printed circuit board (PCB) manufactured from the ExpressPCB PCB design files that I provide via the *Nuts & Volts* and *SERVO* websites. In most cases, that is a good thing, as you don't have to recreate the design work that I have already generated for the particular project. However, you may come up with a design idea that you would like to put down onto a custom PCB of your own. Making that happen is not as difficult as you might think.

To get the most from this discussion, you'll need to be able to run the ExpressPCB application. If you don't already have a copy of it, you can get it free via download from the ExpressPCB site (**www.expresspcb.com**). With a little help from our friends at ExpressPCB, let's cover all of the steps that are necessary to create a perfect, professional PCB from scratch.

SCREENSHOT 1. My 0.050 inch grid spacing is not golden. You may set the grid spacing to any value that you wish. The ExpressSCH application has some very useful options that can help you get a schematic drawn quickly. I suggest reading the ExpressSCH quick start documentation to get an idea of what ExpressSCH can do.

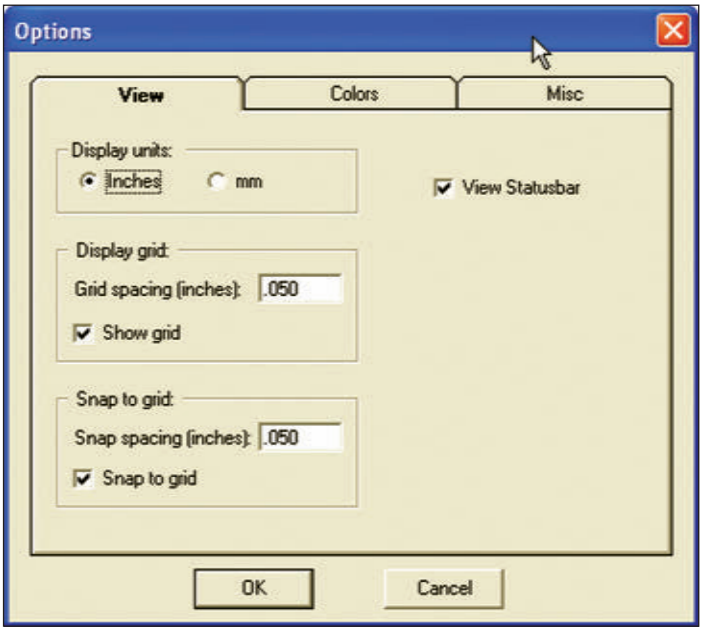

Do You Have a Schematic??

If not, create one before you start designing your custom PCB. In addition to providing a road map for your board layout to follow, capturing a schematic on paper or electronically will force you to call out the parts you will be using in the design.

When creating your schematic, be sure to label each component (R1, R2, C1, C2, etc.). Odds are your design will contain a larger number of resistors and capacitors than integrated circuits or microcontrollers. Being able to cross-reference a resistor in the schematic to a resistor you have likewise labeled on the PCB will help you avoid routing mistakes in your layout.

There is no need to spend any money on a schematic capture program if you use ExpressPCB as your layout tool. ExpressPCB comes bundled with an easy to use schematic creation program called ExpressSCH that ties into the ExpressPCB PCB layout application. ExpressSCH includes a multitude of predefined standard components that are ready to add to your schematic. If you have downloaded and installed the ExpressPCB application as I requested earlier, you already have a copy of ExpressSCH.

When the schematic is complete, the first thing you should do before sitting down to generate your PCB design file is to obtain all of the electronic and mechanical components you will be mounting on your board. It is a good practice to have the actual component in hand when laying down a pad pattern for the part. If your project doesn't require any exotic electronic components, you can save lots of time by selecting your electrical and mechanical components based on the built-in pad layouts found within the ExpressPCB layout application. For example, the pad layout for the six-pin RJ-11 female connector that mates with the Microchip "hockey puck" (the round MPLAB In-Circuit Debugger/Programmer module) cable is already defined all the way down to the Digi-Key part number in the ExpressPCB design application. If your design calls for a part that is not in the

ExpressPCB pad catalog, you can synthesize the custom pad layout within the ExpressPCB IDE. In addition to a catalog of ready-to-place component pad layouts, ExpressPCB also contains a catalog of various pad shapes and sizes. With that, let's design a simple project around a PIC18F2620 and lay it all down with ExpressSCH.

Speaking of Schematics

Take a look at Schematic 1. All of the components with the exception of the ICSP CONNECTOR can be found within the ExpressSCH parts catalog. ExpressSCH is easy to pick up and use. So, there's no need to go into minute detail here as to how I put the LED Blinker schematic together. After browsing the ExpressSCH Quick Start Guide, I'm positive that you'll be drawing your own schematics in a matter of minutes.

The one thing you don't want to do is electrically connect components using the part creation line drawing tool. Always make sure you're using the wire tool when making electrical connections in the schematic. During the creation of the ICSP CONNECTOR, I neglected to group the object as a part. The ExpressSCH netlist checker picked up my error. So, be sure to run the ExpressSCH netlist error check when you have completed your schematic entry. I found it advantageous to set up my schematic grid spacing at 0.050 inches in the Options window you see in Screenshot 1. The Options window can be found within the ExpressSCH's View pull-down menu.

Selecting and placing a component is just as easy as setting up the grid spacing. As you can see in Screenshot 2, I clicked on the Place a component button and selected the PIC18F2620 from the pull-down menu. A raw connection-ready schematic symbol of the PIC18F2620 I selected is shown in Screenshot 3. Once you have the selected part on the schematic page, you can customize its configuration by simply double-clicking on the schematic symbol. The double-click will produce the Component properties window you see in Screenshot 4. Note that in Screenshot 4, I have IDed the PIC18F2620, named the part, and entered its Digi-Key part number in the Component properties window. Entering all of the necessary

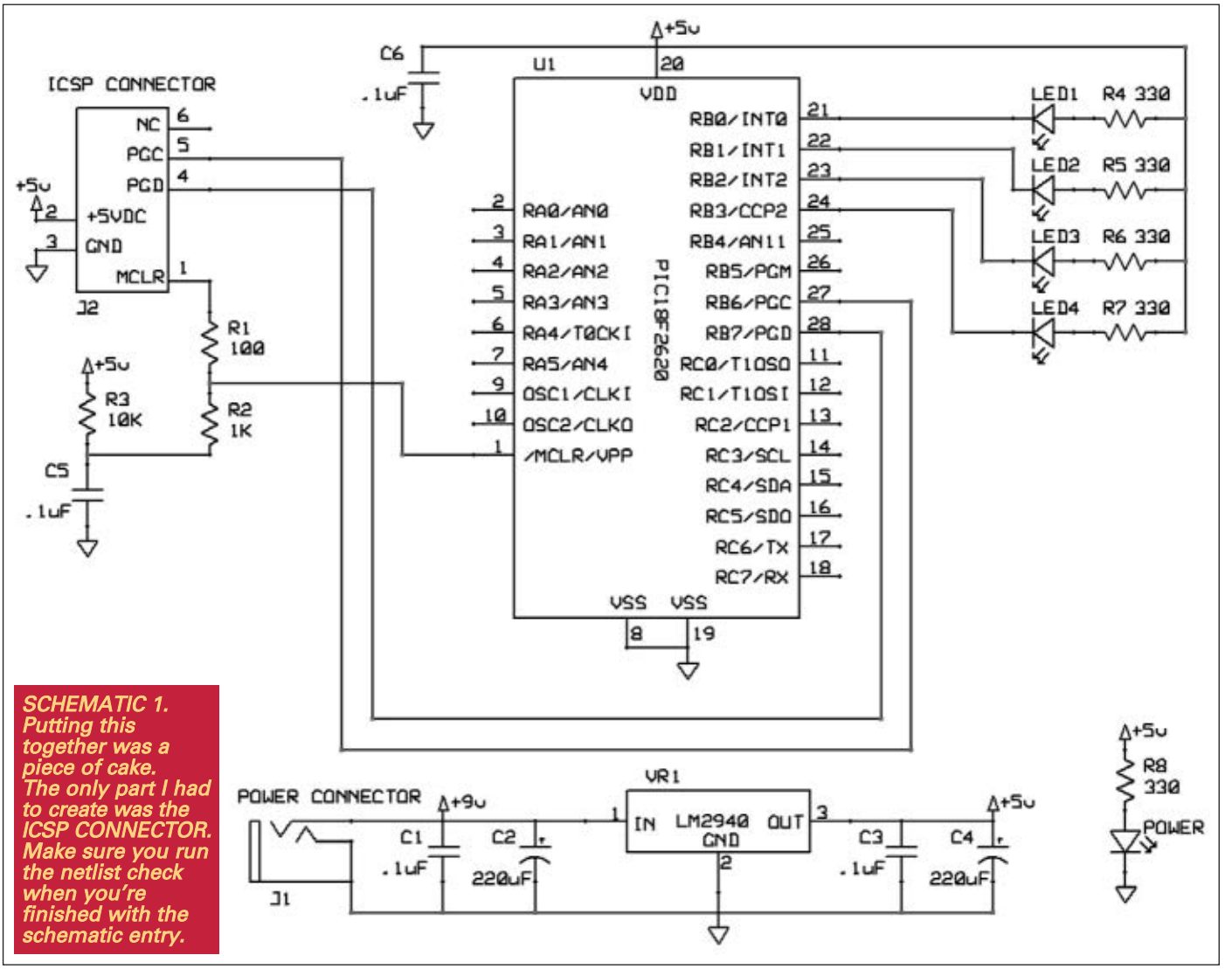

SCHEMATIC 1. Putting this together was a piece of cake. The only part I had to create was the ICSP CONNECTOR. Make sure you run the netlist check when you're finished with the schematic entry.

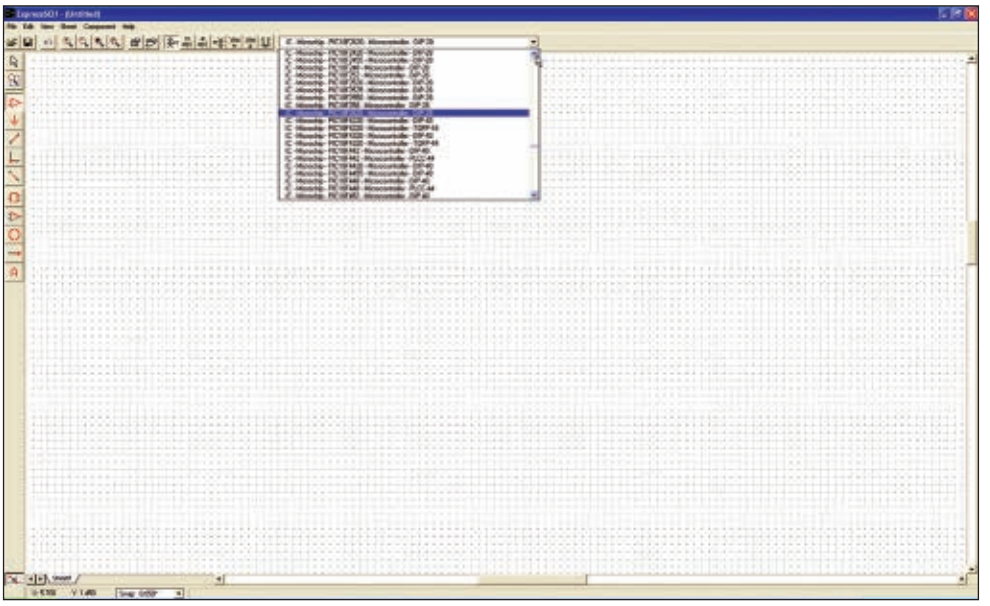

SCREENSHOT 2. As you can see, there are lots of ready-to-place components to choose from. Using these ready-made schematic images ultimately makes laying out your printed circuit board easier as each schematic image in the ExpressSCH catalog can be linked to a similar physical component in the ExpressPCB catalog.

information up front makes things easier at the back end of the PCB layout process.

Our design consists of a PIC18F2620 (U1), an ICSP portal (J1), four LEDs (LED1-LED4) with associated current limiting resistors (R4-R7), and a power supply. There is no crystal in this design as we can call upon the PIC18F2620's internal clock. The power supply is a classic linear regulator-based +5 VDC circuit. There is no rocket science here. All we want this circuit to do is blink the LEDs.

If you peek under the Edit pull-down menu, you'll find a method of generating a BOM (Bill of Materials). I punched our BOM into the Excel spreadsheet you see in Figure 1.

BOM.xls

	A	B	C
1	COMPONENT	VALUE	DIGI-KEY PART NUMBER
2	C1	.1uF	495-3406-ND
3	C2	220uF	565-1038-ND
4	C3	.1uF	495-3406-ND
5	C4	220uF	565-1038-ND
6	C5	.1uF	495-3406-ND
7	C6	.1uF	495-3406-ND
8	J1	POWER CONNECTOR	CP-202A-ND
9	J2	ICSP CONNECTOR	A9043-ND
10	LED1		160-1706-ND
11	LED2		160-1706-ND
12	LED3		160-1706-ND
13	LED4		160-1706-ND
14	POWER		160-1706-ND
15	R1	100	100QBK-ND
16	R2	1K	1.0KQBK-ND
17	R3	10K	10KQBK-ND
18	R4	330	330QBK-ND
19	R5	330	330QBK-ND
20	R6	330	330QBK-ND
21	R7	330	330QBK-ND
22	R8	330	330QBK-ND
23	U1	PIC18F2620	PIC18F2620-I/SP-ND
24	VR1	LM2940	LM2940CT-5.0-ND

FIGURE 1. The ExpressSCH application allows you to copy the BOM data to a file. I used the Excel import function to suck the BOM data into the spreadsheet you see here.

Layout Preparation

Our logical layout in Schematic 1 has been tested and is complete. Now we can begin to do what we all came here to do: lay out the printed circuit board. You will find that the ExpressPCB application looks and feels like the ExpressSCH application. I clicked on the Place a component button in the ExpressPCB application and selected all of the physical components that exist in Schematic 1 as logical components. I arranged the physical components according to their functional area in Screenshot 5. I then activated the File pull-down menu and linked our ExpressSCH led_blinker schematic to the ExpressPCB led_blinker PCB layout.

I prefer to work with a PCB grid of 0.025 inches. Again, just as we did in the ExpressSCH application, I activated the ExpressPCB View pull-down menu and selected the Options entry. The rest of the story lies within the Options window you see in Screenshot 6.

Now is a good time to associate the PCB components with their schematic equivalents. A double-click on the right-most resistor under the RJ-11 jack reveals Screenshot 7. As you can see in the Screenshot 7 Component properties window, I associated the resistor with R1 in Schematic 1. Repeating the double-click trick on every component resulted in what you see in Screenshot 8. I have provided Screenshot 8 as an ExpressPCB file called led_blinker_A. Load up led_blinker _A and make sure it is linked to Schematic 1. Click on the Highlight net connections button. Then, click on various connection points of the components laid down on the printed circuit board. The connections between the clicked component and the other components will be highlighted. I'll use the highlighted net display as a tool to assist in logically laying out the components. It's also a good practice to learn the toolbar button shortcut keys. For instance, simply pressing "N" on the keyboard will put you into Highlight net connections mode. You'll find that being able to keyboard into a mode is easier than pointing the cursor and clicking on

SCREENSHOT 3. Here's a look at the PIC18F2620 schematic image before we identify it and schematically wire it into the design. Note the dots at the end of each pin. The "dots" are very important as they hold the pin's connection information. Always make sure you have actually connected to the dots when wiring your schematic.

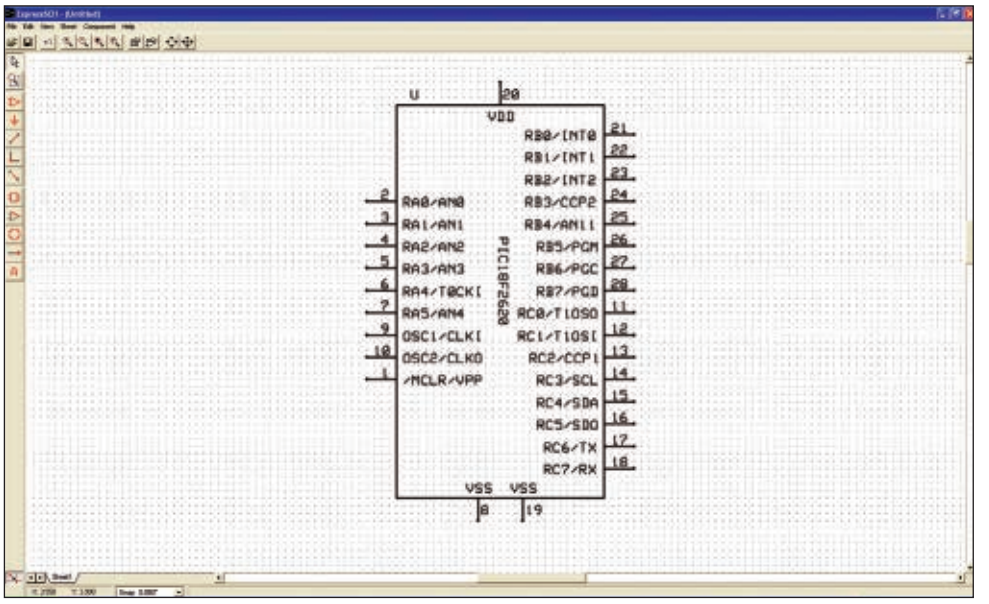

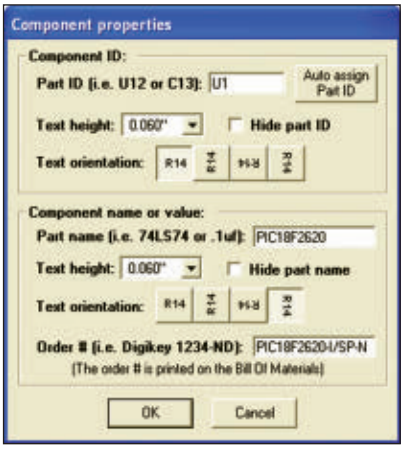

SCREENSHOT 4. The more information you enter here, the easier life will be as you progress through the board layout process. Note that I have entered the actual Digi-Key part number in the Order # field.

the toolbar buttons.

An interesting thing happened while I was clicking on the J1 pads. My design needs to have the top-most pad of J1 connected to the +9V net. The remaining pads are part of the GND net. The schematic symbol for J1 did not match up to my design requirements and the J1 physical component pads didn't match up electrically. The top-most J1 pad was showing a GND connection when I clicked on it. It should be attached to the +9V net. As it turns out, the ExpressSCH fix was easy:

1) I removed the connections to J1 on the schematic and ungrouped J1 as a component.

2) I then moved J1's connection dots — which are the actual pin connections — to the desired connecting points on J1 and regrouped J1 as a component.

3) I rewired J1 into the power supply on the schematic, saved the schematic, and refreshed the link to the PCB each time I moved a pair of connection dots on J1.

4) I then went to the PCB and clicked on the J1 pads.

I repeated the four steps I just outlined until the ExpressPCB J1 pad layout and the ExpressSCH schematic symbol matched my design requirements. I used the highlighted nets to arrange the components as you see them in Screenshot 9. You have this ExpressPCB file in your download package. It is led_blinker_B.

Connecting the Dots

Actually, we have already connected the "dots" in the ExpressSCH phase of the PCB creation process. We are now ready to begin connecting the pads according to the

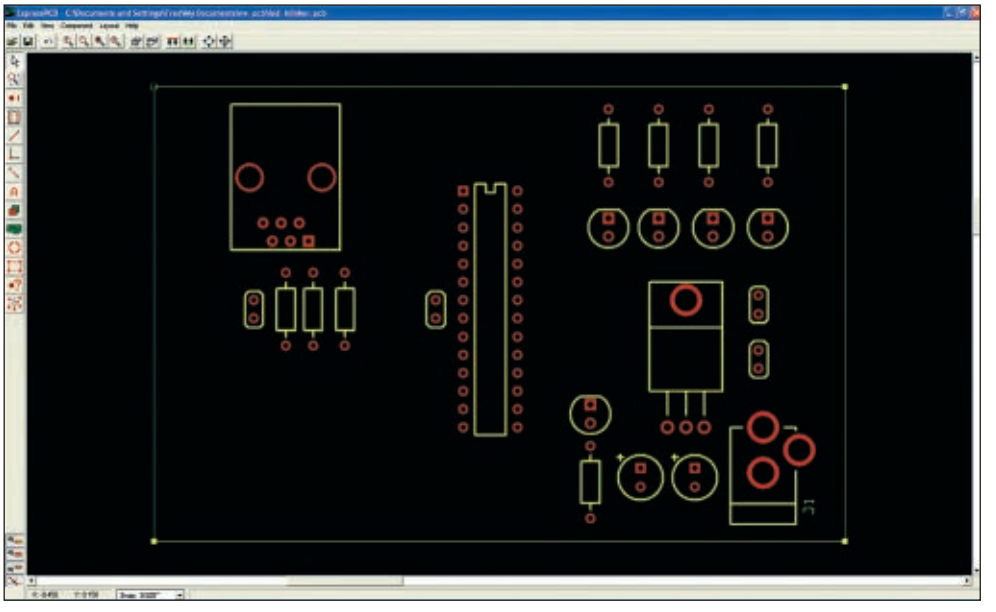

SCREENSHOT 5. This is just an organizational step. We could actually add the components in as we wire them in. This way, we can ID all of the components and crosscheck what we have laid down on the printed circuit board with the schematic.

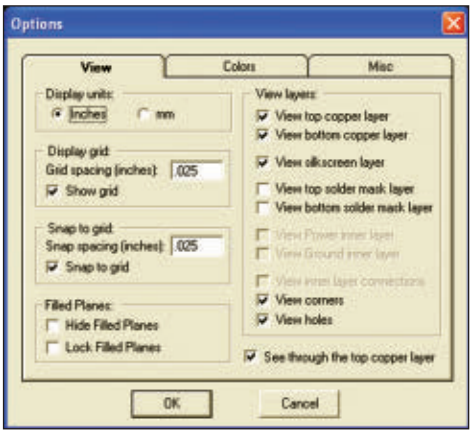

SCREENSHOT 6. As I pointed out in Screenshot 1, my grid spacing selection is not golden. However, through experience I have found this grid spacing to work very well.

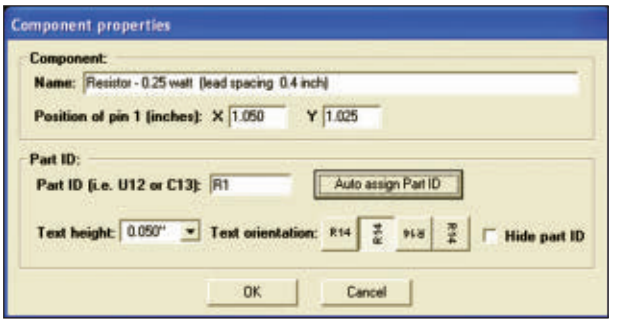

SCREENSHOT 7. Entering an "R" and clicking on the Auto assign Part ID button gave this result. You may also enter a Part ID of your choice here.

nets we defined in Schematic 1. My first pass at manually routing the PCB traces can be seen in Screenshot 10. I highlighted the +5 VDC net Screenshot 10. You can cycle through all of the available nets using the left and right arrow set you see at the upper right of the printed circuit board window in Screenshot 10. This file is led_blinker_C in your download package.

Note that I routed all of the traces on the component side of the PCB. This is a two-layer board, which means that I could have routed some of these traces on the solder side of the board. On a two-layer board, the color red is always associated with the component side while green traces and pads signify the solder side of a two-layer board. The silkscreen layer is always identified with yellow symbols. Be aware that if you order your PCBs using the Standard Service, you will not get a PCB with silkscreen or solder mask. However, you can still use the silkscreen legends to assist you in the PCB design phase.

Although this layout works, we can make some improvements. The entire component complement of the printed circuit board is connected using 0.010 inch traces. A 0.010 inch trace can handle up to 300 mA of current, which is just fine for flashing LEDs in our design. I did a really complex two-layer board years ago and used the thinnest traces I could so that I could squeeze everything onto the board. I got all of the components mounted and connected, only to find out that the voltage drop through the thin traces was killing the half of the PCB that was farthest away from the power supply. Lesson learned. So, it's a good idea to beef up the power and ground traces if you have the space to do so.

Behold Screenshot 11. The +5 VDC net is now made up of 0.025 inch traces. That gives the design a one ampere capability on the +5 VDC net. I also took the liberty to increase the GND net's trace width and the +9 VDC net's width to 0.025 inches, as well. The ExpressPCB manufacturing equipment can "hold" a distance of 0.0007 inches between copper areas. Hold, in this case, means that the PCB manufacturing equipment can place pads and traces 0.0007 inches apart at the minimum. So, when I increased the trace widths, I had to make sure I didn't get too close to an adjacent trace or pad. In fact, I had to move the larger trace that is connected to C5 out to the left a bit.

We don't need to heatsink VR1 in this design. However, there will come a time when you will need to fabricate a PCB heatsink. It won't hurt a thing to insert a heatsink into this design. I used 0.420 inch square SMT pads to build up the LM2940 heatsink pad you see in Screenshot 12. Always use pads instead of drawn planes if you need to be able to solder a component's heatsink pad to the PCB. For production quality boards, the drawn plane area will be covered with solder mask. Trust me, removing unwanted solder mask material is not an easy job, even with a Moto Tool spinning a wire brush. The danger lies in brushing away the copper under the solder mask. If you're in doubt about the solderability of your PCB heatsink, view the solder mask layer only. Traces and pads that are solderable will be much brighter than the solder masked traces and pads. If

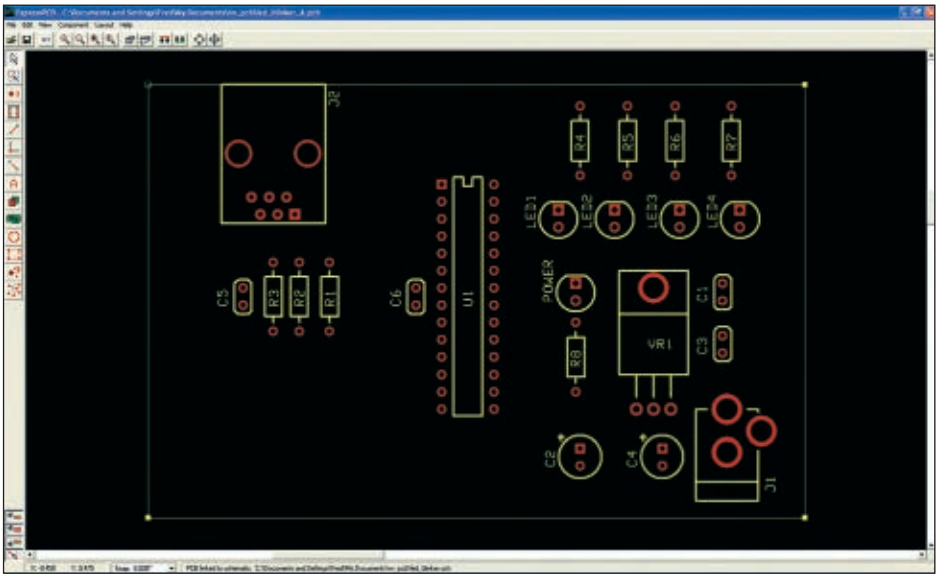

SCREENSHOT 8. Every component here should match up to a component in Schematic 1.

SCREENSHOT 9. This file is in your download package as led_blinker_B. Click on the pads and see how I used the net highlighting to arrange the components.

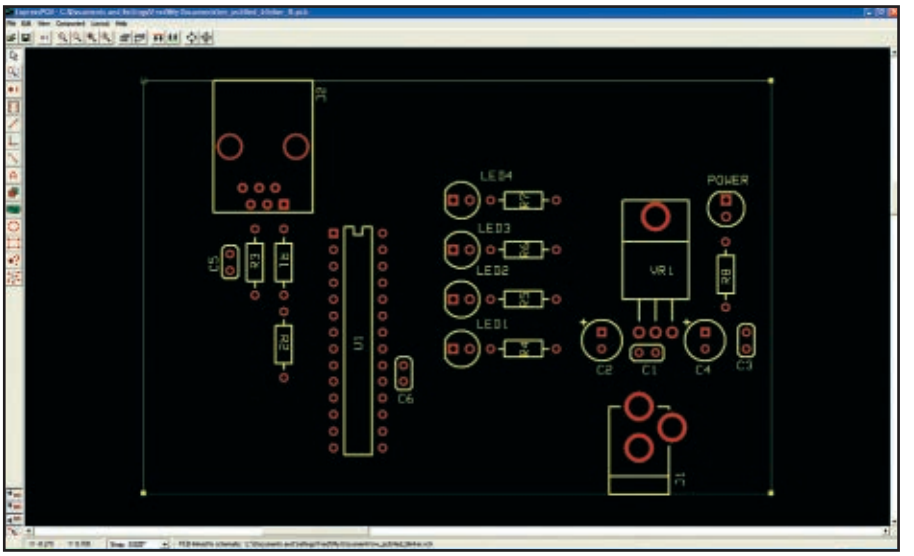

you need some extra heatsink area, you can also place pads on the solder side of the printed circuit board. Just make sure that you put some holes in the heatsink pads to allow the component and solder side copper to thermally couple. The LM2940 pad set I chose to use has a hole in the pattern that would allow the component side copper to thermally contact the solder side copper if it were there. You can play with the heatsinking as I've provided Screenshot 12 as ExpressPCB file led_blinker_D.

Getting Fancy

We have a pretty good printed circuit board design going. However, there's still room for improvement. I just warned you about using drawn planes in PCB heatsink situations. So — like a child — let's play with something that's dangerous after we've been told to leave it alone.

Drawn planes are a very powerful part of ExpressPCB. Adding a ground plane to the solder side of our PCB design will reduce electrical noise in our circuitry. In addition, the ground plane will allow us to eliminate all of the ground (GND) net traces on the component side. With a ground plane on the solder side of our PCB, we can simply attach the ground pins of our components to the ground plane. Since the LM2940's heatsink tab is also at ground potential, the ground plane will become part of the LM2940 PCB heatsink. Note that I selected thermal pads in Screenshot 13. If you select solid pads for your ground plane connection, make sure you don't have to solder anything to that pad. A solid pad attached to the ground plane will suck up your soldering heat like mad. Cold solder joint problems are a bear to hunt down. You can examine my ground

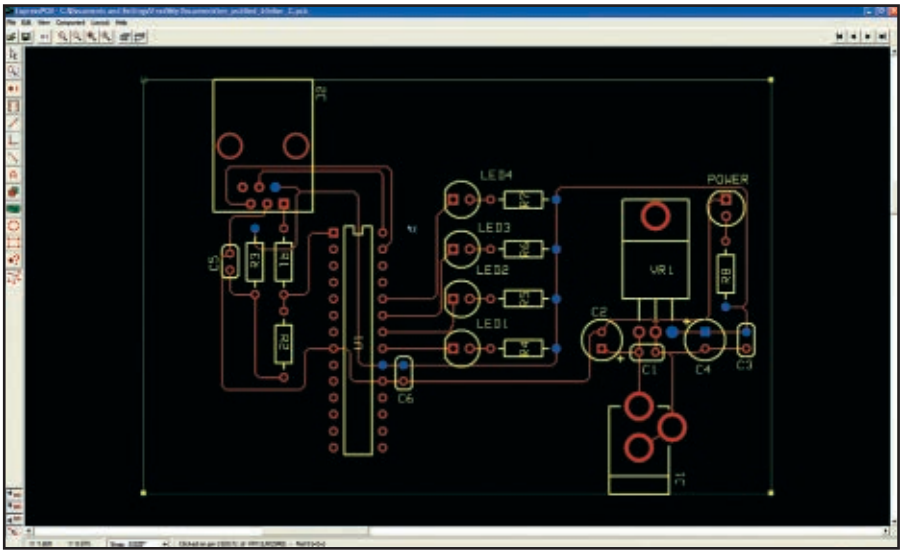

SCREENSHOT 10. This shot has the +5 VDC net highlighted. This layout with the 0.010 inch traces will work just fine. However, we can improve upon this design.

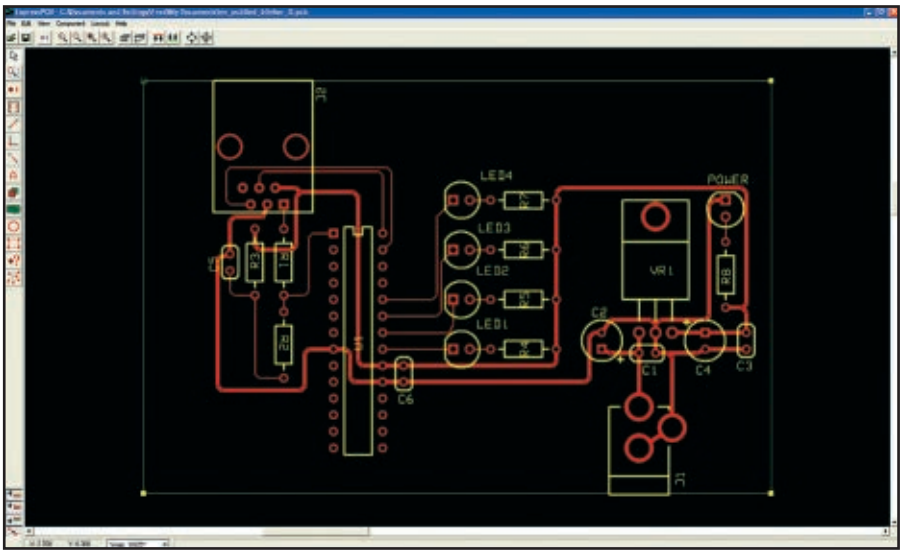

SCREENSHOT 11. Increasing the width of power handling traces makes them stand out. That makes it a bit easier to distinguish between the data and power traces when you're checking your work.

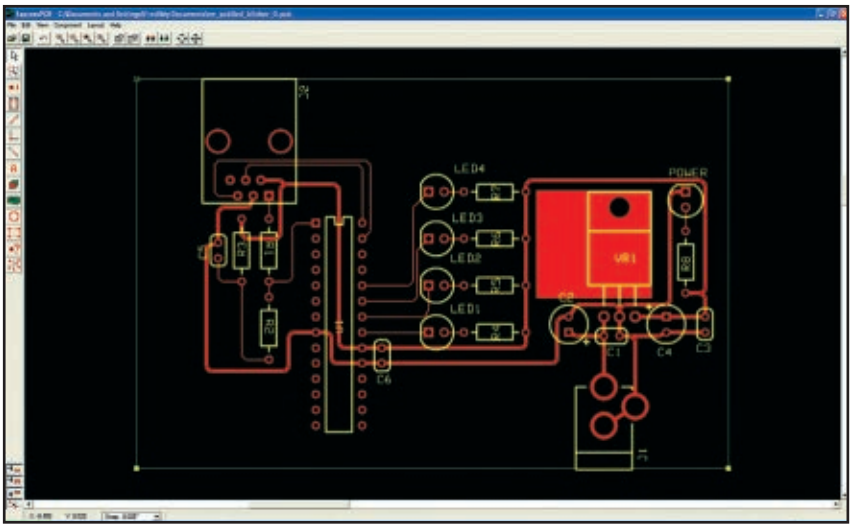

SCREENSHOT 12. If necessary, you could also place a PCB heatsink area on the solder side of the printed circuit board. The LM2940 pad layout I chose has a hole in it that would allow the component and solder layers of the PCB heatsink to make thermal contact.

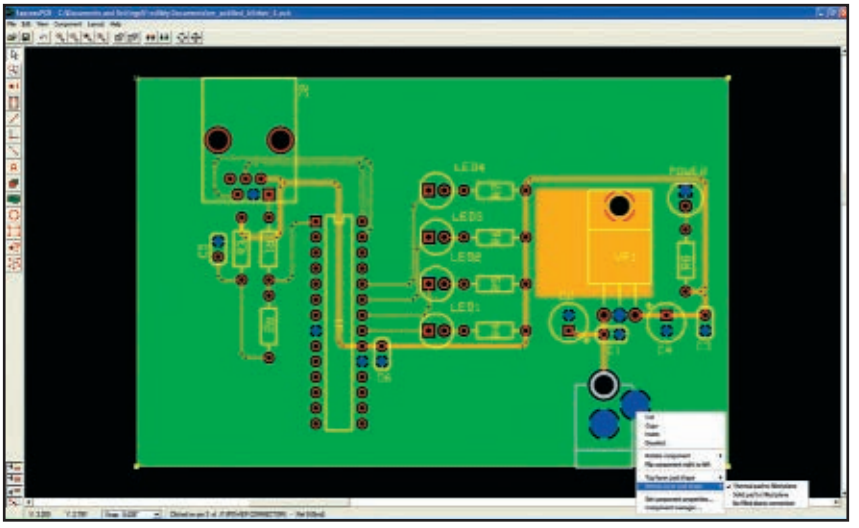

SCREENSHOT 13. The ground plane makes life good for the component side of our printed circuit board as we can eliminate traces that are connecting the GND net. Use thermal pads when the pad that attaches to the ground plane needs to be soldered. Otherwise, your soldering iron's heat will be absorbed by the ground plane copper and you may put down a cold solder joint.

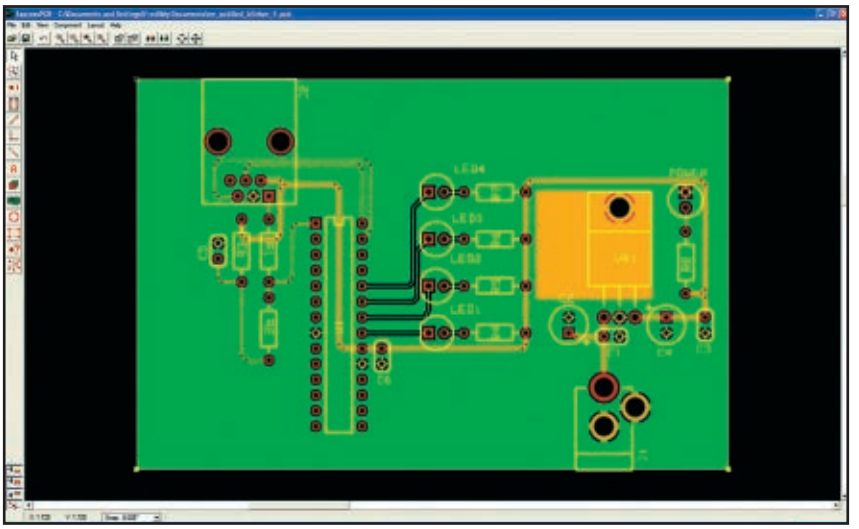

SCREENSHOT 14. There was no need to move the LED signal lines to the solder side. However, you need to know that you have that option. The ExpressPCB application automatically makes room for the traces.

plane work when you load up led_blinker_E. If you need the maneuvering space, you can move traces from the component side to the solder side of our PCB design, even with a ground plane covering all of the board's solder side. Our design doesn't have any trace constraints. However, in Screenshot 14, I moved the LED signal lines to the solder side of the board design just to show you that it can be done. The ExpressPCB application automatically creates a channel in the ground plane for the traces to follow. You have this file in your download package, as well. Load up led_blinker_F to check this concept out for yourself.

Bringing Your ExpressPCB Design to Life

There are still many other things we can do to improve our LED blinker printed circuit board design. For instance, do you need mounting holes in the corners? Can you make it more compact? Take the time to fine-tune your PCB design. It's worth the extra effort.

Once you've finalized your PCB design, it's just a simple matter of selecting Order Boards via the Internet from the ExpressPCB Layout pull-down menu. Before you place your ExpressPCB order, check your work, check your work, check your work, and check your work. If you happen to miss something, fret not! Some wirewrap wire and a magnifier will get you through the mistake most of the time. However, there's no feeling like pulling that PCB out of the box, stuffing the components into their pad patterns, and having it work perfectly. **NV**

Fred Eady can be reached via email at fred@edtp.com.

Source

ExpressPCB (**www.expresspcb.com**)
ExpressSCH; ExpressPCB

AP CIRCUITS
PCB Fabrication Since 1984

As low as...
$9.95 each!

Two Boards
Two Layers
Two Masks
One Legend

Unmasked boards ship next day!

www.apcircuits.com

VISA MasterCard PayPal IPC MEMBER ASSOCIATION CONNECTING ELECTRONICS INDUSTRIES BBB

Microprocessor Hands-On Training

The PRIMER Trainer is a flexible instructional tool featured in Prentice Hall textbooks and used by colleges and universities around the world. Ruggedly designed to resist wear, the PRIMER supports several different programming languages including Assembler, Machine Language, C, BASIC, and FORTH. A comprehensive instruction manual contains over 25 lessons with several examples of program design and hardware control. The Applications Manual provides theory and sample code for a number of hands-on lab projects.

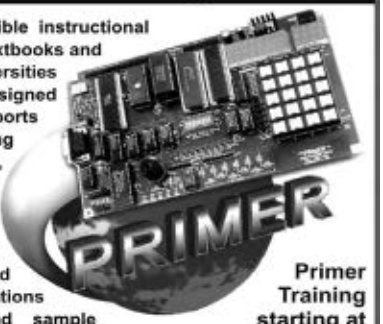

Primer Training starting at $170.00 USD

Application Projects Include:
- Scan Keypad Input & Write to a Display
- Detect Light Levels with a Photocell
- Control Motor Speed using Back EMF
- Design a Waveform Generator
- Measure Temperature
- Program EPROMs
- Bus Interface an 8255 PPI
- Construct a Capacitance Meter
- Interface and Control Stepper Motors
- Design a DTMF Autodialer / Remote Controller

New! - Programming a Reaction Time Tester

Since 1985 OVER 23 YEARS OF SINGLE BOARD SOLUTIONS

EMAC, inc.
Phone 618-529-4525 Fax 618-457-0110
2390 EMAC Way, Carbondale, Illinois 62901
World Wide Web: http://www.emacinc.com

Pololu
Robotics & Electronics

Sensors

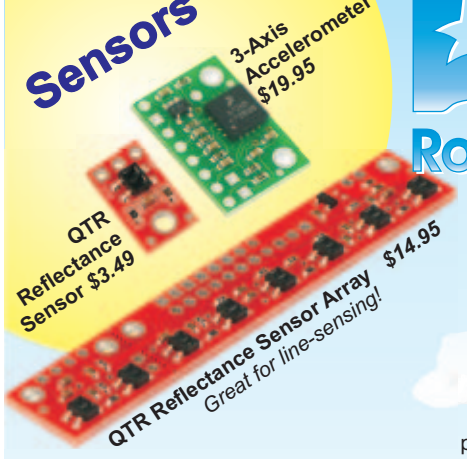

Motor Controllers

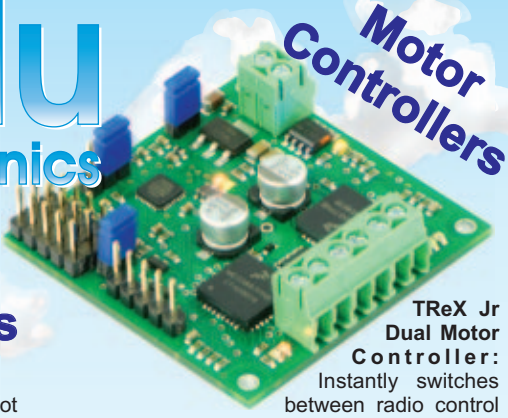

TReX Jr Dual Motor Controller: Instantly switches between radio control (RC) or analog voltage and asynchronous serial (RS-232 or TTL), plus a multitude of additional features. ***$59.95***

Robot Controllers

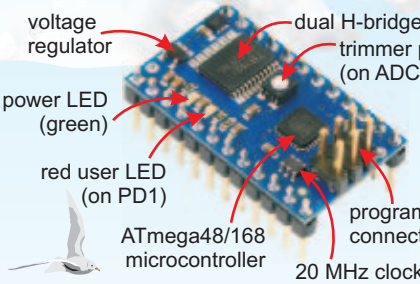

Baby Orangutan B-48 and B-168 ***starting at $24.95***

Solder Paste Stencils ***From $25***

Use our low-cost solder paste stencils to quickly assemble your surface-mount designs.

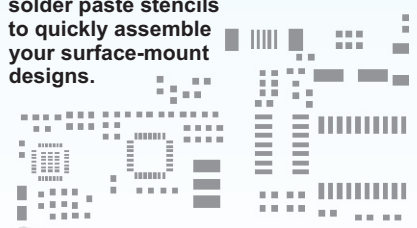

Custom Laser Cutting ***From $25***

Cut your own custom chassis, front panels, and more!

Find out more at **www.pololu.com** or by calling 1-877-7-POLOLU.

BY RON HACKETT

GOOD INTENTIONS AND "FAUX" PC BOARDS

IT'S FUNNY HOW THINGS SOMETIMES GET AWAY FROM ME. My original intention for this month's column was to present an introduction to the many new and powerful features of the PICAXE-28X1 processor but, as I started to elaborate on the details of some of these features, it began to feel like information overload.

Of course, I realize that we first need an actual 28X1 circuit so that we can experiment with a feature in order for the details to make any sense. I thought that I would present the circuit we will be using in the first half of the column and then move on to some of the new features of the 28X1. Along the way, however, I stumbled on a concept I decided to call "Faux" PC (or FPC) boards because these little creatures are essentially stripboards pretending to be PC boards (see Figure 1). In fact, I had so much fun making and writing about Faux PC boards that I ran out of time and space before I had said a word about the 28X1.

I fully realize that not everyone will share my enthusiasm for FPC boards and I want to be clear that they are absolutely unnecessary — you can construct any stripboard circuit you need without ever turning it into a FPC board. However, it will still look like an ordinary stripboard. If you want to produce a professional-looking board and wow your friends (or your boss), a Faux PC board is the way to go!

PICAXE PRIMER 28X1 BASIC CIRCUIT

As I mentioned in the previous installment of the Primer, the 28X1 will be an enduring feature of this column for at least the next 10 or so installments. During this time, we will be using the 28X1 as a "master processor" and interfacing it with the various I/O devices we will be developing. As much as possible, I will retain each I/O circuit on my breadboard setup from month to month so that we can experiment with how our master processor can handle multiple interactions with the various I/O devices we develop. If you would like to do the same, you will need a fairly large breadboard setup. Actually, there are three setup options to choose from, so read on ...

• *Option 1: A "No-Frills" Breadboard Circuit.* For reference throughout this installment, Figure 2 presents the pin-out of the 28X1. Figure 3 is a photo of the simplest and quickest

■ FIGURE 1. A Faux PC Board 28X1 master processor.

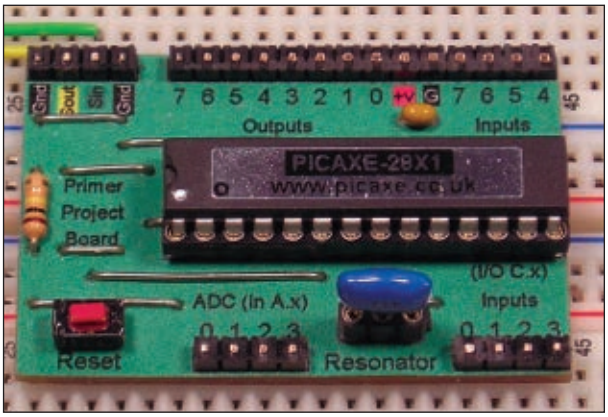

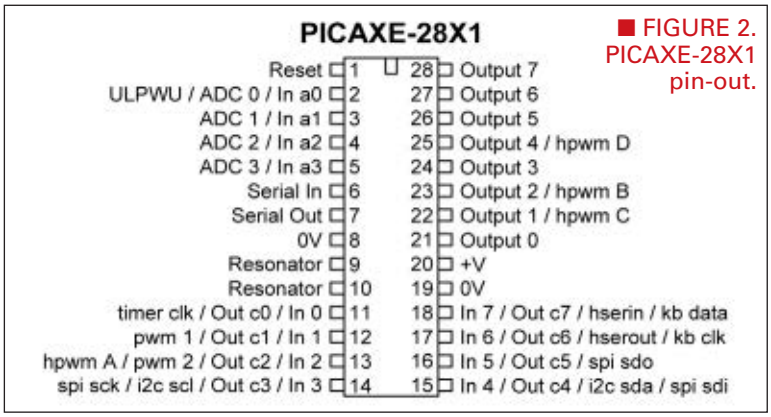

■ FIGURE 2. PICAXE-28X1 pin-out.

approach to implementing a 28X1 master processor circuit. All three versions of our circuit essentially consist of the 28X1 and a very simple reset circuit, which will be described below. One detail of Figure 3 that requires clarification is the 100K resistor which connects the 28X1's "serial in" pin (pin 7) to ground. In order for any PICAXE program to run properly, the processor's serial In pin must be tied to ground. The 10K and 22K resistors in the programming interface normally satisfy this requirement and many people simply include the complete programming circuit in every project they build. However, if you are using a removable programming interface board and actually remove it in order to work on some other project, the serial in pin is left floating and your program will not run at all. I have found that a 100K resistor connected between the serial in pin and ground solves this problem, and that it can also be left in the circuit when the programming interface board is attached without interfering with the programming process. Always include the 100K resistor if you are using a removable programming interface board. As you can see in Figure 3, our no-frills setup consists of three large (730 hole) breadboards with the 28X1 roughly in the center. In the upper right-hand corner, you can see the stripboard programming adapter we constructed last time. (I positioned it so that it will be out of the way of the various I/O circuits we add along the way.) In addition, there are also two very small stripboards that we will construct this month to help simplify the necessary circuitry. If you have only worked with the 08M and 14M processors, both of these circuits will be new to you.

First, near the lower left of the 28X1 in Figure 3 we have the required reset circuitry. In order for the 28X1 to execute a program, its reset pin (pin 1) must be held high; usually by a 4.7K resistor tied to Vcc. To reset the processor, the reset pin must be briefly pulled to ground. The easiest way to do this is to include a small momentary pushbutton switch between the reset pin and ground. The only problem is that most small switches are not very "breadboard-friendly," i.e., they can't be directly inserted into the holes of a standard breadboard. To solve this problem, we're going to construct a small stripboard circuit for our reset switch. I haven't included the LochMaster layout of the stripboard for the reset switch because the three parts (two three-pin male headers and a small momentary pushbutton switch) completely covered the layout, which rendered it useless!

■ FIGURE 3. A "No-Frills" 28X1 master processor circuit.

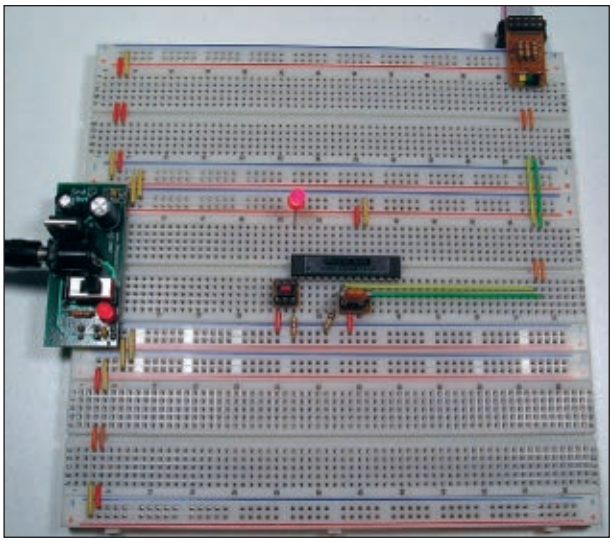

To construct the board for the reset switch, cut out a small piece of stripboard (three traces, with three holes each) and sand the edges smooth. If you use the same parts I did (see the Sources sidebar), you will find that they don't quite fit together on the stripboard because the switch is slightly too large. To correct for this (before soldering anything), file or sand one side of the black plastic strip on each of the three-pin male headers. Figure 4 shows the "before and after" views and a completed switch board so that you can see what needs to be done. Once the switch and headers fit together properly, insert the short ends of both headers (appropriately spaced) into a breadboard to support them. Make certain that the filed sides of both headers are facing in; place the inverted stripboard on the upright pins so that the three pins of each header are in a different trace, and solder the headers in place. Remove the stripboard from the breadboard and insert the switch through the top of the stripboard. Secure it with tape and solder it in place. When the circuit is complete, you can either snip off or leave the middle pin in each of the three-pin male headers, since they are not needed in the circuit connections.

The second stripboard circuit (to the right of the reset switch in Figure 3) is the one that I suggested last time that might be the world's smallest — at least so far! Its function is to make three-pin ceramic resonators more breadboard-friendly. These resonators — which are available in various frequencies — all have three pins with the ground pin in the middle. Unfortunately, on all 28- and 40-pin PICAXE processors (the ones which use resonators), the ground pin is not in the middle of the two resonator pins. As a result, on any breadboard circuit it's necessary to insert the resonator someplace other than right next to the processor and run three jumper wires to complete the circuit. Our little resonator stripboard solves this problem by re-ordering the resonator's three pins to match the

■ FIGURE 4. Reset circuit parts and completed stripboard.

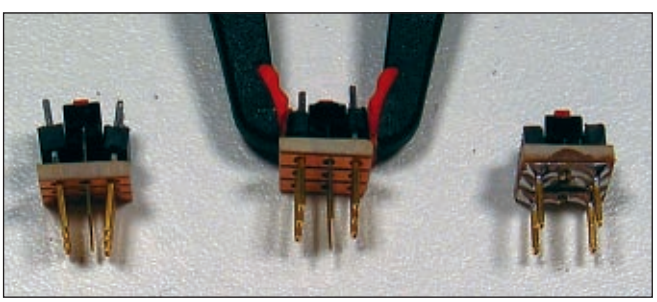

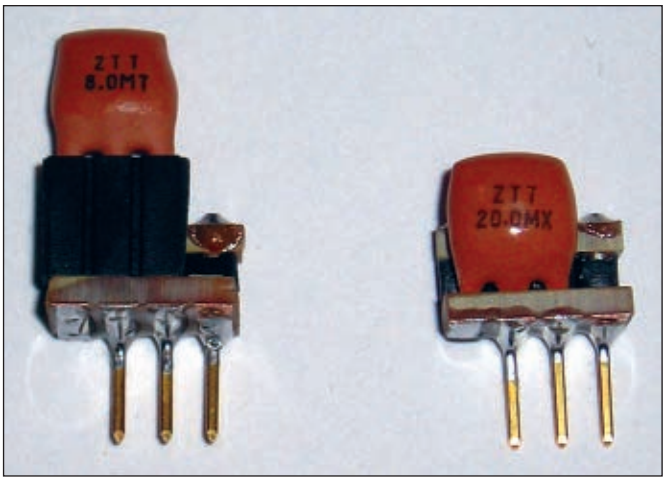

■ FIGURE 6. Two completed resonator stripboards.

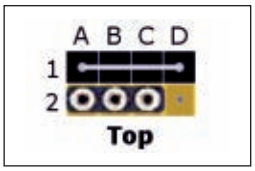

■ FIGURE 5. LochMaster layout for the resonator stripboard.

pin-out of the PICAXE. Even though the resonator circuit is our smallest one to date, it's not the easiest because working with very small stripboard pieces actually makes it more difficult to cut and sand the parts. I burned a finger more than once using my belt sander before it dawned on me that it's better to hold the small stripboard pieces with a pair of lineman's pliers when sanding them. Also, this is the first time we will construct what I call a "sandwich board" because it consists of two stripboards sandwiched together orthogonally, with their traces perpendicular to each other.

Figure 5 shows the LochMaster layout for the resonator board. The bottom view is omitted because no traces need to be cut. In addition to the stripboard, only two parts are required: a four-pin male header and a three-pin female header, both of which are available on my website (**www.JRHackett.net**). Before constructing the resonator board, it may be helpful to refer to Figure 6, which shows two completed boards. Start by cutting and sanding a piece of stripboard with four traces of two holes each. Insert a four-pin male header from the top of the board and solder it to all four traces. Then, insert a three-pin female header (also from the top and positioned as shown) and solder its pins to the traces. Next, snip off the top (short) pin portions from the two pins in the middle of the four-pin male header; also snip off the bottom (long) pin portion from the pin at location A1. Finally, cut and sand a second piece of stripboard with one trace of four holes. (Here's where you need pliers if you are using a belt sander!) Sandwich this piece of stripboard on top of the male header with its trace facing up. Solder it to the two remaining pin portions at locations A1 and D1.

At this point, you are probably saying to yourself, "Why not simply solder a wire on top of the male header from the pin at A1 to the pin at D1?" Actually, that would work just as well, but there really is a method to my madness! We will be constructing much larger stripboards when we begin working with LCDs and other I/O devices, and these larger boards would be much more difficult (if not impossible) to construct without sandwich boards. I think it's much easier to understand the sandwich board concept in the context of our simple little resonator board, which is why I introduced it here.

Before we move on to our second option, a word of caution is in order with regard to the resonator circuit. Some resonators have surprisingly thick pins which will not fit into a female header. To make these resonators breadboard friendly, just construct a sandwich board without using the three-pin female header (see Figure 6) and solder the resonator directly to the board. Even if you decide to go with one of the other two options for implementing our 28X1 master processor circuit, I think you will find both the switch and resonator stripboard circuits to be helpful additions to your PICAXE explorations. The switch circuit is especially useful, since it can just as easily function as an input switch in any project that requires one. It's also a simple matter to mount two or more switches on one stripboard for those times when you need multiple inputs.

• *Option 2: A "Faux" PC Board Circuit.* Figure 7 is a photo of the faux PC board version of our second master processor option. (The little programming adapter in the photo is also an FPC board, so the following

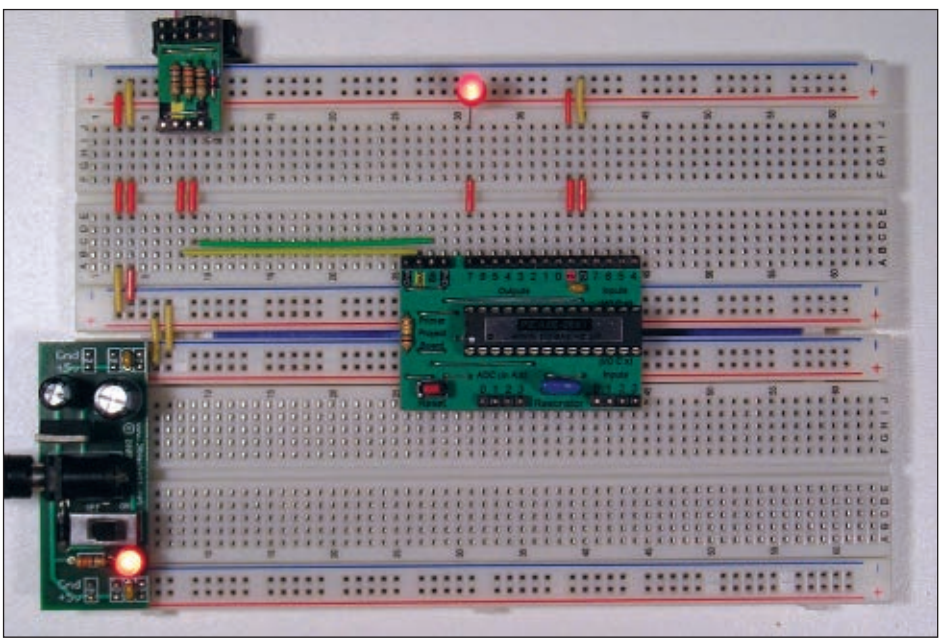

■ FIGURE 7. A Faux PC board 28X1 master processor circuit.

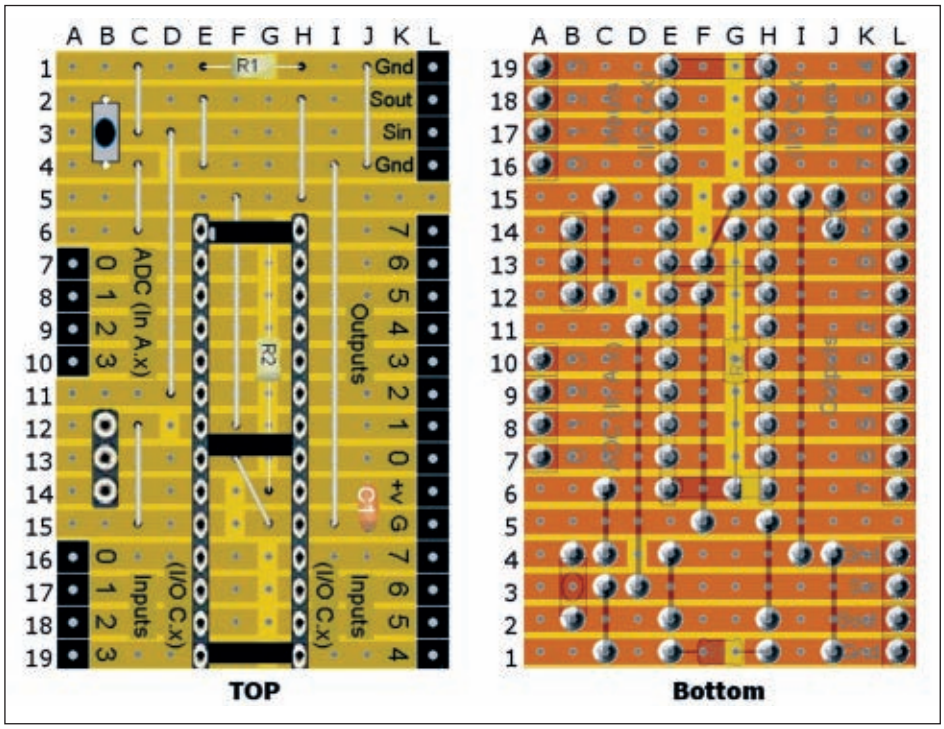

■ FIGURE 8. LochMaster layout for a regular 28X1 circuit.

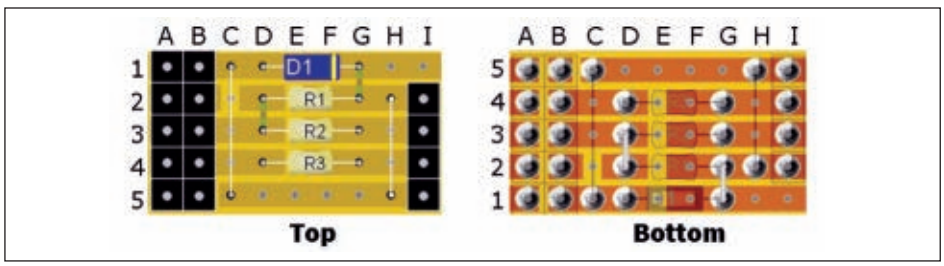

■ FIGURE 9. LochMaster layout for a four-pin programming adapter.

explanation applies to its construction, as well.) The 28X1 circuit itself is very straightforward, but the steps necessary to create the illusion of a PC board will require some elaboration. Figure 8 presents the top and bottom views of the LochMaster layout of the regular stripboard version of the circuit. Essentially, it consists of the reset switch and resonator circuits we just discussed, with the necessary programming pins placed so that they match the programming adapter we constructed in the previous installment of the Primer. Since then, I have added a second ground connection to the standard programming adapter to facilitate using it with various I/O circuits we will be exploring in future columns. The three-pin version will work just as well for the 28X1 circuit, but if you want to construct the four-pin version Figure 9 presents both views of its LochMaster layout.

As you can see in Figure 8, all of the 28X1's I/O pins are simply brought out to male headers at the edges of the board. In this way, the board is wide enough so that it can straddle two breadboards. If you look closely at the photo in Figure 7, you will see that there is a small amount of space between the two breadboards. That's because breadboards — for some reason — aren't sized to be exact multiples of 0.1 inches — IMHO they should be, but I won't get into a rant! The reason for this straddling approach is so that we will have a full top breadboard on which to implement our output circuits and a full bottom breadboard for our input circuits. (That's also why Option 1 uses three breadboards.)

The Parts List for the 28X1 stripboard circuit is presented in Figure 10. For the most part, these are common parts we have already used. However, if you don't have a supply on hand, all of the parts are available on my website. As I mentioned, the circuit is very straightforward so I won't go into the details of its construction, except for one point: Be sure to use a machine-pin socket for the 28X1 because a regular socket doesn't provide the necessary clearance (between itself and the board) to install the two jumpers and the resistor that need to be placed underneath the socket. As usual, it's best to work from the smallest to the largest part when soldering.

If you want to also implement the FPC board feature, the paper label must be affixed to the board before anything is soldered. As I mentioned earlier, this process does require some explanation. Figure 11 presents the top view of the LochMaster layout for the FPC overlay. If you compare this layout with the standard layout presented in Figure 8, you can see that the FPC overlay is 0.1 inches larger on each edge. My first attempt at this process was a failure because I wasn't able to get everything to line up exactly. When I applied the label to the stripboard (we'll get to that next), I could see little bits of the edges of the stripboard sticking out. To solve this problem, I decided to make the background larger than the actual stripboard and trim it to fit after it was affixed to the board. (The background was a large green rectangle, which I moved to the back via the

■ Capacitor, Ceramic, 0.1" Centers, 0.01 µF
■ Headers, Female — Three Pins
■ Headers, Male — 26 Pins
■ Jumper Wire, 22 or 24 Gauge
■ Resistor, 1/4 W, 4.7K
■ Resistor, 1/4 W, 100K
■ Resonator, Ceramic (4, 8, 16, or 20 MHz)
■ Socket, Machine Pin DIP, 28 Pins
■ Switch, Miniature Momentary PB, 0.2" Centers

■ FIGURE 10. Parts List for the 28X1 stripboard circuit.

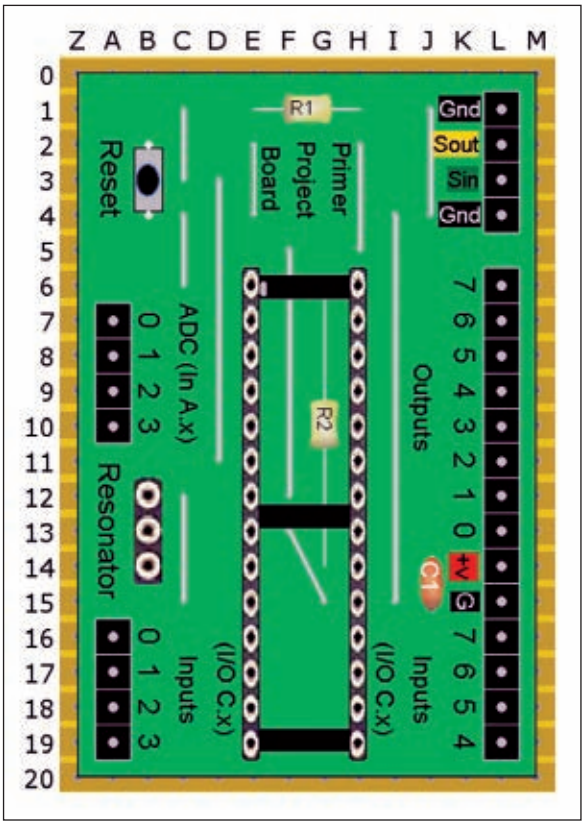

■ FIGURE 11. LochMaster layout for the Faux PC board overlay.

way, print out the layout and make sure it is exactly 2.1 inches by 1.4 inches. If it isn't, adjust the scale of the printout until it is. Trim the printout slightly oversized on three sides, but leave an extra couple inches of paper on one of the short edges to facilitate handling the overlay. Then, set the overlay face up on a desk or countertop and cover it with a piece of clear two-inch packing tape. Make sure the tape adheres well to the paper without any air bubbles. Peel the unit up carefully and trim the tape to roughly the same size as the paper.

Now comes the tedious part of the process. Place the overlay face up on a piece of heavy corrugated cardboard and use a pin or needle to pierce it precisely at each point where a component will be inserted in the board — all 85 of them! Next, snap off three two-pin pieces of a male header strip and push them through the holes (and into the cardboard) at the three corners of the board that will contain male headers. Leaving the headers inserted in the overlay, remove it from the cardboard and insert it on top of the stripboard so that each of the headers mates with the appropriate hole in the board. With the overlay now properly aligned with the stripboard, re-pierce all the other holes to be sure they align with a hole in the stripboard. Finally, remove the three two-pin headers and insert the shorter ends into a breadboard positioned so that the stripboard can be placed on top with the pins sticking up through the same holes at the three corners of the overlay. Carefully press the overlay down onto the pins so that they pierce the same holes from the bottom and protrude through the top. At this point, we can be certain that when we affix the overlay to the stripboard, the two will line up perfectly. (This is a good thing, because once we do so, the overlay can no longer be adjusted.) Finally, remove the overlay and the stripboard, leaving the three two-pin male headers positioned in the breadboard exactly as they are.

Now that the tedious alignment procedure is completed, we're ready to affix the overlay to the stripboard. I used a spray adhesive manufactured by 3M (General Purpose #45), but most spray adhesives should work. This is one of those situations where less is better. My first attempt was a disaster because I sprayed so much adhesive that everything was a gummy mess. It's probably a good idea to practice first with some scraps of paper and stripboard, since a lot of work has already gone into preparing the overlay. Lightly spray the top of the stripboard and the bottom of the overlay. Follow the adhesive's directions and wait the appropriate length of time, then place the stripboard (right side up) back on the male header pins (positioned appropriately) and carefully press the overlay down onto it so that the protruding pins pierce the corresponding holes. (I found it helpful to use the end of a

"arrange" menu of LochMaster.)

To assemble the 28X1 board, cut and sand a piece of stripboard with 19 traces of 12 holes each and cut the traces as per the bottom layout of Figure 8. If you have LochMaster, you may want to make your own overlay; if not, an actual size JPEG file of the layout is available on the *N&V* website at **www.nutsvolts.com**. Either

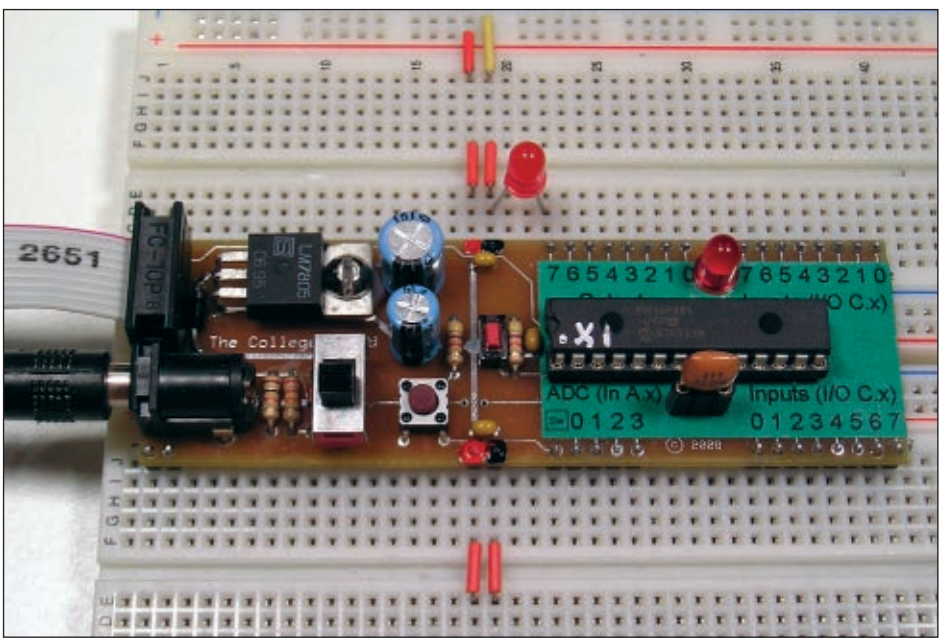

■ FIGURE 12. A genuine PC board 28X1 master processor.

flat screwdriver to push the overlay gradually down on each of the pins.) When the overlay is fully in contact with the stripboard, remove them from the header pins and use your thumb to fully bond them, working from the center out. Invert the stripboard, place it on a piece of scrap wood, and use a single-edged razor blade to trim the overlay to the exact size of the stripboard.

Finally, we're ready to actually assemble the circuit, but you're on your own for that because we're almost out of space this month and we still have one more option to cover. It's a very easy circuit to assemble; just remember that the male headers are inserted through the top of the board so that they can be soldered on the bottom.

• *Option 3: A Genuine Printed Circuit Board Circuit.* Figure 12 is a photo of a prototype PC board I have designed for experimenting with the 28X1 processor. (I used the same techniques we just discussed to make the green label so that it's clear where each I/O pin connects.) By the time you are reading this column, the final production boards will be available on my website. Of course, the standard PC board silk-screen layer will display all the necessary I/O labels.

The PC board option does have two advantages over the other options. First, it's an all-in-one approach — the 28X1 circuitry, the power supply, and the programming adapter circuitry are all contained on one board, which provides more breadboard space for our projects. Second, the 28X1 I/O pins of port C — each of which can be configured either as an input or output (more on that next time) — are brought out to both the top and the bottom of the board. That way, if we decide to use a pin for an output device, we can connect to it on the top of the board. If we choose instead to use that pin for an input device, we can connect to it on the bottom of the board. This feature saves even more breadboard space and simplifies our circuitry, as well. Of course, the downside of this option is that you don't get to have the fun of making an FPC board — unless, of course, you decide to try both approaches.

SOURCES

PICAXE-28X1
www.phanderson.com/picaxe

Stripboard, Project Parts, and 28X1 PC Board
www.JRHackett.net/order.htm

THAT'S ALL, FOLKS!

That's all we have space for this month. In the next installment of the Primer, we really will begin to explore some of the many powerful features of the 28X1, but don't wait for me — construct and test your option of choice, power it up, and have some fun! **NV**

The Standard for checking Capacitors in-circuit

Good enough to be the choice of Panasonic, Pioneer, NBC, ABC, Ford, JVC, NASA and thousands of independent service technicians.

Inexpensive enough to pay for itself in just one day's repairs. At $209, it's affordable.

And with a 60 day trial period, satisfaction guaranteed or money-back policy, the only thing you can lose is all the time you're currently spending on trying to repair all those dogs you've given up on.

CapAnalyzer 88A

Locate shorted or leaky components or conditions to the exact spot *in-circuit*

Still cutting up the pcb, and unsoldering every part trying to guess at where the short is?

$209

Your DVM shows the same shorted reading all along the pcb trace. LeakSeeker 82B has the resolution to find the defective component. Touch pads along the trace, and LeakSeeker beeps highest in pitch at the defect's pad. Now you can locate a shorted part only a quarter of an inch away from a good part. Short can be from 0 to 150 ohms

LeakSeeker 82B

***Available at your distributor, or call* 561-487-6103**

Electronic Design Specialists www.eds-inc.com

BY LOUIS E. FRENZEL W5LEF

THE 700 MHz SPECTRUM
Why should you care?

IF IT WEREN'T FOR SPECTRUM, THERE WOULD BE NO WIRELESS. The good news is that spectrum does exist. The bad news is that there is a finite amount of it. Spectrum is sort-of like real estate. There is only so much land on earth so it too is finite. When you use it all up, then what do you do?

So, what exactly is that spectrum? Spectrum actually refers to free space and there is lots of that, right? Yes, but what we are talking about here is the electromagnetic frequency spectrum. It is that wide range of frequencies used for radio communications. Radio signals are made up of both electric and magnetic fields. They travel together through free space from transmitter to receiver, supporting and regenerating one another along the way. These fields oscillate at specific frequencies. And it is the range of frequencies that is of concern. You can't just use any frequency you want because you could interfere with some other wireless user on the same or nearby frequency. So in our civilized world, the governments of countries regulate and assign frequency spectrum. And that is why spectrum is such a precious commodity. Here is a brief look at the wireless spectrum and more specifically that 108 MHz band of frequencies around 700 MHz — some of which was recently auctioned off by the Federal Communications Commission (FCC).

THE IMPORTANCE OF SPECTRUM

The electromagnetic frequency spectrum extends from DC (0 Hz) to well beyond light waves which are also considered electromagnetic waves. Most of that spectrum is useful for wireless communications. For general purposes of classifying radio spectrum, it is divided up and given specific names. The most common segments are listed in Table 1.

Band Name	Frequency Range
Low Frequencies (LF)	30 kHz to 300 kHz
Medium Frequencies (MF)	300 kHz to 3 MHz
High Frequencies (HF)	3 MHz to 30 MHz
Very High Frequencies (VHF)	30 MHz to 300 MHz
Ultra High Frequencies (UHF)	300 MHz to 3 GHz
Super High Frequencies (SHF)	3 GHz to 30 GHz
Extremely High Frequencies (EHF)	30 GHz to 300 GHz

TABLE 1

Most radio communications take place in the 300 kHz to 30 GHz range. There is little below 300 kHz. What little there is in the LF band has been used for air or marine navigation. One example is the WWVB radio frequency/time standard station in Colorado that transmits on 60 kHz.

The MF range is widely used, mostly by AM radio stations (535 to 1,710 kHz), amateur radio, and again some marine radio services. The HF band from 3 to 30 MHz is also known as short wave. It is heavily used worldwide for broadcasting, amateur radio, and all sorts of long range government and military transmissions.

The VHF band is also heavily used. TV broadcasts occur in this range along with a variety of two-way radio services including amateur radio. UHF is the same way. Lots of two-way radio and especially cell phone service. The upper TV broadcast bands are also here, along with GPS navigation, wireless networks, and some other satellite services. Incidentally, frequencies over 1 GHz are called microwaves.

SHF uses are mainly radar and satellite. Some wireless networking services (Wi-Fi 802.11a at 5 GHz) are here, as well. EHF is not so widely used yet but most applications are radar and satellite. Frequencies in this range are generally called millimeter waves.

Above 300 GHz is kind-of a no-man's land where virtually nothing

exists. These terahertz (THz) frequencies are not used mainly because we haven't really figured out how to make electronic devices function at those levels. Beyond the THz frequencies is light. The low light frequencies are called infrared. You cannot see these waves but they are light nevertheless and act the same as visible light; mainly they can be reflected and focused with lenses. Your TV remote control uses an infrared LED with digital codes to control channel, volume, etc. Visible light is next highest in frequency. Red is low frequency light while violet is high frequency light. Ultra violet is right above visible light and you cannot see those waves either, but you can feel them in your sunburn. Beyond ultraviolet are all those strange waves like cosmic, gamma, and x-rays.

In the early days of radio, the spectrum was not widely used. Only certain segments were useful for radio broadcasting, amateur radio, and two-way radio. But over the years, wireless techniques have been perfected so there has been an enormous increase in two-way radio usage, wireless networks, and all sorts of other services like satellite. At this point in time, we have almost run out of useful spectrum. It has caused all sorts of legal squabbles and has kept the FCC busy in allocating and arbitrating spectrum to those who want and need it. The FCC handles business and consumer spectrum allocations but it is the National Telecommunications and Information Agency (NTIA) of the Department of Commerce that allocates and regulates the government and military spectrum.

Today, there is a massive shortage of spectrum. The demand is especially great for more cell phone spectrum as all that is currently allocated is being used and little future expansion is possible without new spectrum. The newer third generation (3G) and fourth generation (4G) cell phone data services require much more spectrum, so it is the lack of suitable spectrum that is delaying the adoption of some of those new technologies. The same is true of those wanting to offer high speed Internet and other broadband wireless services using new technologies like WiMAX. Not enough spectrum. What to do?

As it turns out, much of that allocated spectrum is actually not used. This is a great waste as it hampers all wireless businesses since they cannot expand to offer desired services. The latest idea is to reallocate that spectrum.

THE SPECTRUM SOLUTIONS

One of the most under used chunks of spectrum is that previously allocated to UHF TV broadcasting. It ranges from 698 MHz to 806 MHz. It is generally known as the 700 MHz band. That range of frequencies was divided up into 6 MHz bands assigned to the UHF TV channels from 52 to 69 (see Figure 1). The FCC has decided to take this spectrum away from the broadcasters and reallocate it to other more widely needed wireless services. The broadcasters have screamed bloody murder yet they have little to fight back with as they did not really use the spectrum that was assigned to them for free long ago. Any UHF TV stations left in the spectrum are being reassigned to some unused band.

The availability of this spectrum essentially begins after February 17, 2009. That is the date given by the FCC for the cut-off of all analog TV transmissions. Beyond that date, all the TV spectrum from 52 MHz (Channel 2) to 698 MHz (Channel 51) will only be used for digital TV. So, if you do not have a digital TV set then you won't be able to get over-the-air TV any more. Only digital TV — including high definition (HD) — will be transmitted. Of course, if you have cable or satellite TV (which over 85% of the US homes already have), you can still use your old analog TV set since the set top box makes the digital to analog conversion for you. You can also buy a converter box that will receive the DTV signals and convert them to analog so you can use your old set a while longer until you can afford the new digital set. The government is offering a coupon good for about $40 to help you afford the converter; two per home maximum. For more on the analog to digital TV switch-over, go to **www.dtv.gov**.

With the 700 MHz band essentially unencumbered, the FCC can allocate it to those who want it, but for a price. To be fair about it, the FCC recently auctioned off 62 MHz of this huge segment of spectrum. To indicate how valuable it is, get this: They collected $19.592 billion for it and awarded over 1,090 new licenses. Most of it goes for new cell phone expansion and services, as well as high speed broadband applications like Internet access, back haul, and the new mobile TV for cell phones. AT&T and Verizon got the biggest segments of the auctioned spectrum. The blocks labeled A

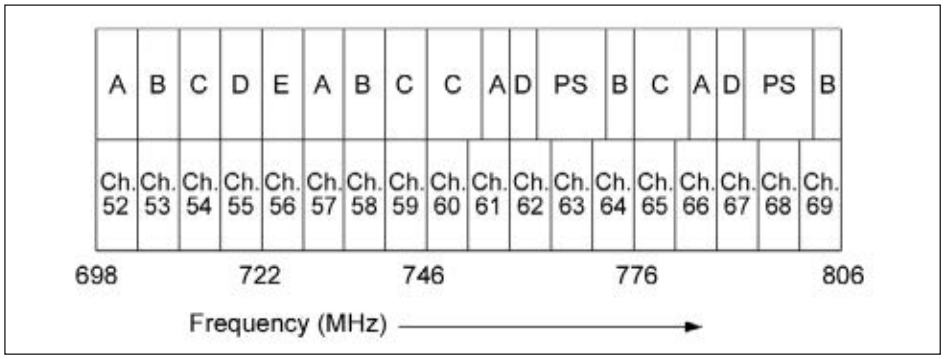

■ FIGURE 1. The lower blocks are the older 6 MHz wide UHF TV channels. The upper blocks are the newer assignments for cell phone service, wireless broadband, and mobile TV. These blocks are not to scale. PS refers to the public safety blocks reserved for future auction.

through E are the new segments allocated to specific services. Some of those segments are paired, meaning that two segments are used together. For example, blocks A, B, and C are paired in two 6 MHz segments for uplink and downlink cell phone service.

New public safety (PS) segments are also allocated for a new wireless effort that intends to encourage the build-out of a nationwide public safety network that all fire, police, and other first responders can use to communicate with one another without all the current interoperability problems that prevent one agency from speaking with another because of frequency assignment, modulation, access method, or other differences that are rampant. Unfortunately, the bids on the public safety segments did not meet the FCC's minimum bid requirements so it was not awarded. The FCC plans to reauction this segment in the near future.

PROSPECTS FOR THE 700 MHZ BAND

The 700 MHz band is highly prized because of its radio wave propagation characteristics. Such UHF waves are like light waves in that the propagation is essentially line-of-sight (LOS). There must be a straight path from transmitting antenna to receiving antenna with little or no obstruction in between. Of course, radio waves pass right through most obstructions like trees and buildings but they are greatly attenuated making the signal considerably smaller at the receiver. That is why high antennas are the key to long transmission range.

Another factor is that the 700 MHz signals travel farther than higher frequency signals. A basic radio propagation formula known as the Friis Equation essentially says that the range of transmission is inversely proportional to the signal wavelength. Remember, the lower the frequency, the higher the wavelength. That means for a given transmit power, receiver sensitivity, and antenna gains, a 700 MHz signal will travel farther than a 2 GHz signal. While microwave frequencies offer greater spectrum for a given service, their range is naturally restricted. What this means is that a cell phone on 700 MHz will connect to a cell site more reliably than one on 2.1 GHz. Wide coverage means fewer cell sites which are very expensive. And better signal strength means fewer dropped calls and less customer complaints. Currently, most cellular service takes place in bands from about 800 to 950 MHz and in the 1,900 to 2,100 MHz range. The cell phone companies are dying to get their hands on the 700 MHz spectrum.

One other factor favoring 700 MHz signals is that lower frequencies do not have the same multipath problems. Multipath refers to the multiple signals created by a signal being reflected by objects in its path, creating multiple versions of the signal that are somewhat delayed. These multipath signals add together at the receiver antenna creating signal cancellation. If the reflected signals come from moving objects like cars, the multipath varies causing the signal to fade in and out. Multipath gets worse at the higher frequencies and is especially bad above about 1 GHz. It is considerably less of a problem at the lower frequencies. So you can see why the cellular companies covet 700 MHz.

Finally, the FCC indicated that part of the C blocks auctioned off and acquired by Verizon had to be used in "open" cell phone applications. The term open refers to the ability of subscribers to use any phone or accessory software they want. Right now, most cell phone systems are closed meaning that subscribers must use the phones and accessories supplied by the carriers. Carriers are just now beginning to consider open systems. That should yield some interesting new applications and products. **NV**

Order online at:
www.melabs.com

Development Tools for PIC® MCUs
microEngineering Labs, Inc.

Phone: (719) 520-5323
Fax: (719) 520-1867
Box 60039
Colorado Springs, CO 80960

USB Programmer for PIC® MCUs
$89.95 (as shown)
RoHS Compliant
Programs PIC MCUs including low-voltage (3.3V) devices
Includes Software for Windows 98, Me, NT, XP, and Vista.

With Accessories for $119.95:
Includes Programmer, Software, USB Cable, and Programming Adapter for 8 to 40-pin DIP.

LAB-X Experimenter Boards

Pre-Assembled Board
Available for 8, 14, 18, 28, and 40-pin PIC® MCUs
2-line, 20-char LCD Module
9-pin Serial Port
Sample Programs
Full Schematic Diagram
Pricing from $79.95 to $349.95

BASIC Compilers for PICmicro®

Easy-To-Use BASIC Commands
Windows 98/Me/2K/XP/Vista
PICBASIC™ Compiler $99.95
BASIC Stamp 1 Compatible
Supports most 14-bit Core PICs
Built-In Serial Comm Commands
PICBASIC PRO™ Compiler $249.95
Supports most PICmicro® MCU Families
Direct Access to Internal Registers
Supports In-Line Assembly Language
Interrupts in PICBASIC and Assembly
Built-In USB, I2C, RS-232 and More
Source Level Debugging

EPIC™ Parallel Port Programmer starting at $59.95

PICPROTO™ Prototyping Boards

Double-Sided with Plate-Thru Holes
Circuitry for Power Supply and Clock
Large Prototype Area
Boards Available for Most PIC® MCUs
Documentation and Schematic
Pricing from $8.95 to $19.95

See our full range of products, including books, accessories, and components at:
www.melabs.com

ALL ELECTRONICS CORPORATION

QUALITY Parts
FAST Shipping
DISCOUNT Pricing

CALL, WRITE, FAX or E-MAIL for a FREE 96 page catalog.
Outside the U.S.A. send $3.00 postage.

KOSS® CLIPZ™ EARPHONES

Lightweight stereo earphones clip comfortably on to each ear. Great for travel and sports. No headband, requires very little storage space. 4 ft cord with 3.5mm mini-phone plug.

Frequency Response: 50-20,000 Hz
Impedance: 32 Ohms
Sensitivity:: 98 dB SPL/1mW
Distortion: <0.5%
CAT# HP-105

$4.85 each

5 VDC SUB-MINI RELAY

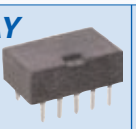

Axicom # FP2 D3009. D.P.D.T. telecom / signal relay. 14mm x 9mm x 5mm. 5Vdc, 178 Ohm coil (operates on 3.5 -11 Vdc). Contacts rated 2 Amps. UL.
CAT# RLY-506

70¢ each

50 for 60¢ each • 200 for 50¢ each

SPST N.O. MOMENTARY PUSHBUTTON

Black. Rated 3 Amps / 125V. 0.55" dia. bezel. Mounts in 0.49" dia. hole in panels up to 0.2" thick. Solder-loop terminals.
CAT# PB-155

80¢ each

10 for 70¢ each
100 for 45¢ each

2" NEODYMIUM BAR MAGNET

50mm x 15mm x 5mm (1.97" x 0.59" x 0.21"). Powerful neodymium magnet. Nickel-plated finish.
CAT# MAG-132

$3.50 each

SOLDERLESS BREADBOARD

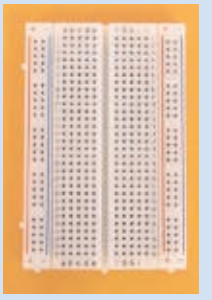

Design and change circuits quickly and cleanly. Accommodate all sizes of dips and discrete components with lead diameters up to 0.032". Interconnect with solid hook-up wire (#22 AWG recommended). Wires and components can be used and re-used many times without damage to board or components. 400 tie points. 300 contacts on main board and 50 contacts on each of two power distribution strips. Distribution strips are removable.
CAT# PB-400

$4.00 each

DPDT (ON)-OFF-(ON) TOGGLE SWITCH

Arcolectric # 3972BA. D.P.D.T., (on)-off-(on), momentary both directions, center-off. Rated 16A/ 277Vac. Good-quality toggle switch with 17.5mm metal handle. 15/32" threaded bushing mount. Splash-proof, O-ring moisture seal. Screw terminals. Can also be used with 0.25" qc or solder. UL, CSA, RoHS.
CAT# STS-125

$3.75 each

10 for $3.60 each • 100 for $3.20 each

3.5MM STEREO PLUGS, 5.5 FT CABLE

Ideal for input / output connection of portable stereos, MP3 players and computers. 5.5' length. One blue and one green plug.
CAT# CB-189

$1.00 each

SAW III DIGITAL VOICE RECORDER

30 second voice recorder. 5.50" high. Operates on 2 AAA batteries (included).
CAT# SAW-3

10 for $1.85 each

$2.00 each

12VDC 3.33A SWITCHING POWER SUPPLY

Hipro # HP-O2040D43
Input: 100-240Vac
Output: 12Vdc 3.33A
Table-top style switching power supply. 5 ft output cord with ferrite bead for EMI suppression. Terminated with 2.5mm coax power plug, center positive. Includes three-prong IEC detachable power cord. UL, CE.
CAT# PS-1233

10 for $15.25 each

$15.75 each

12 LED UV FLASHLIGHT

Ideal for checking currency or credit cards. Ultraviolet light reveals the security strips in US currency, watermarks hidden in bank notes and fluorescent ink and dyes used as anti-counterfeiting measures in credit cards. Illuminate scorpions, check hand stamps at clubs, scan a crime scene for foreign materials. Solid aluminum body. Long-life LEDs emit 380-385nm. Operates on 3AAA batteries (not included).
CAT# FL-UV

$11.50 each

12 VDC 58 RPM MINI-MOTOR

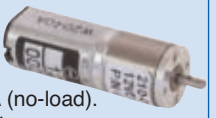

Sayama #12SM-AT3. Compact, good-quality 12Vdc gearhead motor. 58RPM, @ 12Vdc, 20mA (no-load). 12mm diameter x 35mm long. Solder-lug terminals. 2mm diameter x 6mm long flatted shaft.
CAT# DCM-318

$12.95 each

Shop ON-LINE www.allelectronics.com
ORDER TOLL FREE 1-800-826-5432

MAIL ORDERS TO:
ALL ELECTRONICS CORP.
14928 OXNARD ST., VAN NUYS, CA 91411-2610

FAX (818) 781-2653 • INFO (818) 904-0524
E-MAIL allcorp@allcorp.com

NO MINIMUM ORDER • All Orders Can Be Charged to Visa, Mastercard, American Express or Discover • Checks and Money Orders Accepted by Mail • Orders Delivered in the State of California must include California State Sales Tax • NO C.O.D • Shipping and Handling $7.00 for the 48 Continental United States - ALL OTHERS including Alaska, Hawaii, P.R. and Canada Must Pay Full Shipping • Quantities Limited • Prices Subject to change without notice.

MANUFACTURERS - We Purchase EXCESS INVENTORIES... Call, Write, E-MAIL or Fax YOUR LIST.

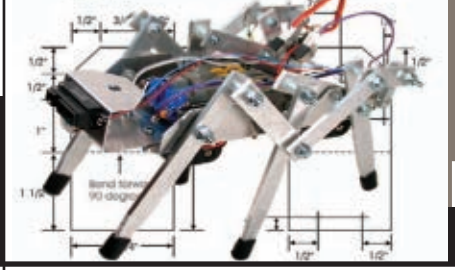

■ BY VERN GRANER

HABITAT FOR HOBBIES — PART 1

JUST AS MOST BIOLOGICAL ENTITIES REQUIRE A SPECIFIC HABITAT TO flourish, hobbies such as robotics and electronics need a place to live and grow. Specifically, the hobbyist workbench.

I closed my last few articles by asking readers to send in pictures of their workbenches as a way to get a look at how we — as a group — approach our hobby. What items do we have in common? What unique solutions have some hobbyists conjured? What items did we never think to have or use? I hoped to address questions like these and also get some tips and comments from a few folks who might bother to send in a photo or two. I asked for pictures of workbenches, for descriptions of the essential components, and any tips or personal experiences you cared to share. Well, the response was over the top! You folks responded in droves, and WOW are there some great workspaces out there!

I was also comforted to find that many of you also conform to my trademark "randomly organized visual database o' stuff" approach to your sty ... uh ... work space. When I finally started to write up the article, it was apparent all the ideas and submissions wouldn't fit into a single issue, so after some discussion with the good folks over at *Nuts & Volts*, it was decided that in order to cover this topic completely, we would have to break it into two parts. In this first part, we'll cover what was sent in and in the second part, we'll summarize the ideas and suggestions and see if we can create the perfect workspace. Also, to spice things up a bit we're going to throw in a little contest with a not-so-little prize!

I'd like to take a moment to thank those of you whose pictures are not shown for sending in your stories and photos. I apologize for not being able to fit everyone in, but there really were just too many responses to print them all. And for those of you featured here, I want to thank you for your emails, letters, and for sharing your workspace with the rest of us. I'm hoping that your hard-won words of wisdom (combined with the photos of these diverse workspaces) will help all of us to improve our own workbenches and make our "Habitats" more hospitable to our hobby.

And now, for our Feature (workbench) Presentation!

Walt Weaver

We begin with Walt Weaver. Walt was one of the first to send in pictures of his workspace. Among other things, he designs and builds his own experimental mini-robots. He provides a glimpse into the basic components he deems necessary for an effective workbench:

It's great to see someone writing articles on robotics for the "rest of us." I have been a self-confessed tinkerer all my life. While I do enjoy tinkering with computers, microprocessors, etc., my real passion is with the mechanics and interfaces of robotics. I have a rather cluttered little bench (next to the furnace). As you can see, a lot of the equipment is homebrewed. I think the most used tools are the multimeter, the power supply, the frequency/pulse generator, the frequency meter, and, of course, the computer with a good serial port. The other two things that are necessary are a good assortment of tools (collected over a number of years) and as big a supply of parts as possible. Again, the parts were accumulated over a number of years from various sources ranging from surplus stores to yard sales. Oh yes, one other thing I almost forgot, lots of jumper cables. I have an old website at ***http://wwweaver.tripod.com/robots/robtotic.htm*** *that shows some of my early projects. I am looking forward to some great articles. I hope this helps.*

Joe Lutz

Joe's workspace is a model of efficiency. This just goes to show you don't need a ton of space to get things done. A small workspace can also be a good tool to force those of us who are less organized to pick carefully what we are working on and to finish what we start! It's pretty hard to begin a new project when you run out of AFS (Available Flat Surface). Joe's got some good comments and advice for making an efficient workspace:

I live in a small apartment in Seattle, WA, so space is an issue. Check the photo of my workstation. Yes, that is a vacuum tube! It's part of a Nixie clock I'm making with only glue logic; no processors. My father-in-law is an old-school engineer who absolutely loves tubes. We have built oscillators, latches, flip-flops, counters ... all sorts of things out of tubes. I'm not sure if there is anything I'd do differently, I've learned from all my successes and failures.

TIPS

- *A beginner should invest in a decent soldering iron (Welland). My first two were RadioShack fire torches; I realized after acquiring a decent iron that most of my problems were due to poor equipment.*
- *Work with plenty of light. I have an "under-the-cabinet" xenon light bar purchased from Home Depot that I screwed in under my shelves. It plugs into the wall and offers great light.*
- *You can sample parts from most manufacturers. The hobbyist does not need large quantities or very high range components. You can get A LOT of useful components for free.*
- *Start with easy circuits to gain success and confidence.*
- *Keep a logbook or journal to document your successes and failures. That way, when you have a similar problem you can return and see what was done before to make it work.*

*Join electronic forums for advice and ideas. There are a bunch of good ones, Nuts & Volts (**http://forum.servomagazine.com**), Sparkfun (**http://forum.sparkfun.com/index.php**), and ladyada (**http://forums.ladyada.net**). She also has a great discussion on equipment for beginners (**www.ladyada.net/library/equipt/kits.html**). Or, forums specific to your interests like robotics, RF, high altitude balloons, etc.*

ADVICE

Start with basic circuits, and jump in and do it! I started wanting to do fairly complex projects and got quickly discouraged. I then kept looking for complete projects with a purpose. I finally learned my lesson, but felt like I wasted great tinkering time! I suggest looking at the circuits in Nuts & Volts*, especially in the Q&A section. Now, actually go to your workstation and build them. You will find, at first, that it isn't as easy as it looks. There is external power to consider and, of course, debugging your mistakes. Think about why it works, not just replicating a circuit. NOW, start looking at the unanswered and see if you can figure out the answer. I almost never get the exact answer as someone else. Sometimes I use a different method or parts. Sometimes I couldn't answer it, but at least I have thought about the problem and learned from it.*

Build and design your own circuits! Start with something easy like oscillating an LED with a 555. Then go to two alternating blinky lights. Figure out how and why it's working, then expand on the design. Can you add an 8 ohm speaker or a switch? What modifications are required? Can you do the exact same blinky light with capacitors and transistors? What is the difference? What are the advantages and disadvantages?

Finally, I've been following the articles and websites for the Ponginator. Kudos to the Austin Robot Group for making electronics fun and exciting! I have also enjoyed Vern's previous articles on the Thereping, model railroad controllers, and Parallax controllers.

Rich Syphrit

Rich sent in a picture and it was high-resolution enough that I could zoom in and make out just about every item he had there. I felt compelled to respond to him with a list of what I thought I could identify from the picture and see how close my guesses were. This is what I sent:

Thanks Rich! I really appreciate you sending in a photo. Love the custom instrumentation panels across the front! VERY cool! Okay, zooming in a bit, let's see how I do at recognizing all this stuff. I think I recognize:

- Stack o' Altoids tins! The electronics enclosure of champions!
- Nice HP scope.
- Nakamichi signal generator?
- An Audio Controls spectrum analyzer/EQ back there peeking out?
- A Game cube NTSC video monitor showing the weather channel (presumably fed from the VHS VCR to the left/below it?).
- A Mini helicopter in a box on top of the VCR
- Video monitor for Windows XP (keyboard and mouse stored on the far left of the bench.
- A video capture interface for the PC attached to the leg of the bench.
- Temperature controlled pencil iron.
- A pair of 6x4 oval speakers with RadioShack tweeters flush mounted?

Now on to the uber-cool custom panels and stuff suspended from the shelf ... from left to right:

- Large black knob ... a variable transformer?
- Three red pilot lights for status of fuse to AC power plugs?
- Dual vertical meters would be in/out voltages of a transformer?
- Meters and banana jacks would be for testing speakers and audio?
- Next, looks like a function generator or signal generator.
- Last panel looks like an audio/video patch bay for testing AV gear ... maybe an embedded power supply in there?

So, how'd I do?? In addition to the picture, I'd love to know if you have any comments on things you would do differently. Also, are there things a beginner should always have? Any "if I knew then what I know now I would ..." type bits of advice to offer? This was his response:

Very good identification of stuff! Most of my friends just think it is a pile of blinky lights.

- *The Nakamichi is a tuner/pre amp with a tape deck analyzer under it.*
- *The AC supply meters are voltage and current for the first AC outlet.*
- *The meters and banana jacks are my current project: a dual DC power supply. An H-bridge ± supply to run DC motors forward and reverse, and a large regulated supply.*

For advice — identify your needs, but plan on your needs and equipment opportunities changing over time.

Russ Kincaid, NV Q&A columnist
Milford, NH

Russ is a man after my own heart. His workbench looks VERY familiar! I think the general consensus is "if you want a job done, ask the man with the dirty hands." Russ's bench looks like one that's used hard and used often. I have a feeling things get done there. Here's his description:

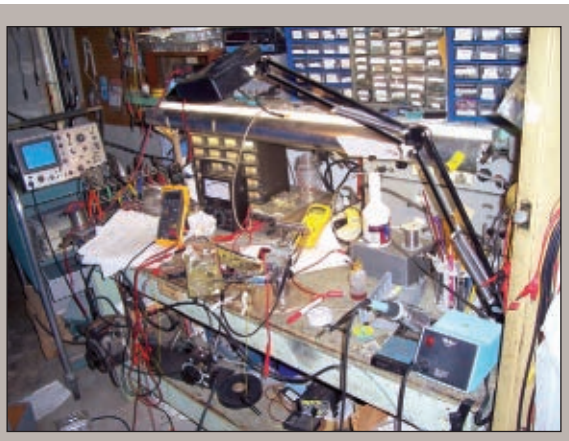

I didn't clean it up at all! My grandson uses the second bench when he is available, otherwise I use it for drilling and inspection. The scope is a Hitachi that I bought on eBay to replace a Tektronix 541 monster that I purchased in the 1970s.

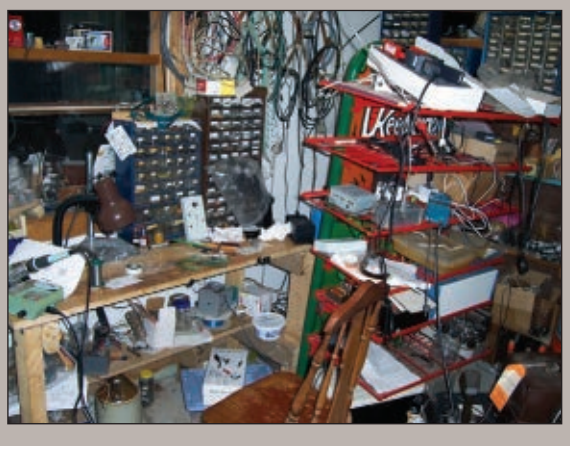

The circuit boards are homemade using a laser printer and PNP Blue; I wish there were a better way. I have a Wavetek audio generator and a Data Precision frequency counter, both 30 years old. My late friend, Charlie Puckette, gave me all his "stuff" so I have more obsolete parts than I can catalog. Of course, the beginner needs common hand tools like a soldering iron, needle nose pliers, side cutter, and tweezers. A multimeter would be my first choice, then an oscilloscope. Other than that, it depends on what facet of electronics you are into. I bought the frequency counter when I was repairing CB radios. The Wavetek was given to me in lieu of payment; I was designing a burglar alarm at the time.

Dave Lutz KA6GTC

Surprisingly, Dave is the only guy who sent in a picture of himself seated at his workbench! When I saw it, I immediately thought "Old Sk00l!." This is a veteran of the electronics wars. I mean, c'mon, look at some of that test gear to his left and tell me you're not impressed! Based on the email he sent along with his photo, I was right on the money.

I have been an electronic hobbyist for over 50 years and I still love it. The necessary tools are:

- *Soldering irons, one large, and one small tip*
- *Solder sucker of some kind*
- *Analog VOM, VTVM, and digital VOM*
- *Scope, dual trace is handy, but not necessary*
- *Lots of screw drivers, pliers, and tweezers*

If you have to do as I do and can't afford the parts, there are lots of dead pieces of stuff to strip parts from. If you want to have several projects running at the same time, you really need a workbench for each project. I don't, and you can see what happens when you are working on many projects at once.

I have a large projection TV and the best sound system in town. All for nothing — pieces were given to me to get rid of them and I repaired them for my own use. I am running a local computer net with four systems on it, with a DSL line. Very little of my equipment was bought outright, and I make some side money fixing things for other people. That bench has to cover general appliances along with R&D for my company, computers, ham radio, and home repair (plumbing, etc.); 90% of my parts are from scrounged equipment.

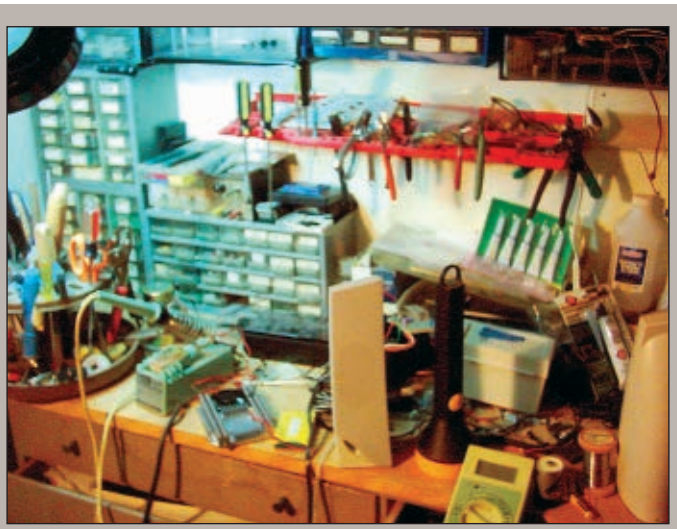

Gary L. Camp

Though Gary's pictures came out a bit on the blurry side, his advice is quite focused! He has some great tips for saving money when putting together a workshop on a budget.

I am writing in response to your request for suggestions on a beginner's lab. I have for years thought of doing some articles on this as there is a lot of economical homemade "lab" equipment that could be made and I see so many overpriced suggestions and tools. I am in the middle of trying to sell my home and move, so my lab is down for the count. Here are two pictures of the old lab with one of the two filled walls in the room. The other walls have a window and an equally filled closet.

My main thrust for a small home lab is the homemade tool. This is both a learning experience and an acquisition of a fine tool that one knows very well since he built it. For instance, a cheap 3-1/2 digit meter can be turned into a number of tools with simple add-on circuits. Temperature, capacitance, inductance, and power can all be done, as well as many more. I also like the idea of using an old PC as part of the lab bench. There are many cheap "scope" hook-ups that go to 100 kHz which is fine for audio. In fact, there are ways to use the sound card inputs, with a little isolation circuitry, for a really cheap "scope" for fun and learning. Note that it is not always smart or cheap to build it. Harbor Freight tool store sells three digit meters for $3 and there is no way I would ever use a $10-$15 panel meter or worse, make a PIC controlled LCD meter when these are so common. Indoor/outdoor temp meters for $5 can be found, so forget complicated, expensive products when these can be used. Harbor Freight also had an IR temp meter for $9.95! Note that a trip to the thrift store/swap meet/yard sale can get many great deals. And remember that an old audio receiver can be a preamp, power amp, RF amp, and many other useful bench devices, as well. Be creative.

I see a few minimum tools required. In order of general importance: DMM $3 for cheapy; $40 for multi-functioned with PC connection, a big plus. Over time, get several cheapy DMMs for dedicated use like for a power meter (voltage times current is power), bench PC for programing, "scope," spreadsheet, controller/monitor, etc. Note that older PCs with serial and parallel ports can be easily used as controllers/monitors and more using DOS Basic, etc., for a power supply (use old PC supply for great, cheap, highly regulated one). Little white plug-in circuit breadboard is so useful, I have to suggest it. A stereo preamp circuit with settable gain (op-amp) with mic add-on 1-5 watt power amp circuit card for little servos, speaker drivers, etc. Frequency counter/timer/event counter.

There are several circuits to do this using DMMs and PC extras for adding to the set. Lab standards for voltage, current, ohms, etc., using a variety of circuits and devices like precision resistors, voltage standards, etc. PIC (or favorite controller) programmer for PC battery checker /charger /restorer, lots of hand tools, magnifiers, soldering station, glues, etc., and a tool box.

Well, that's the idea for the equipment. As for the layout, I would think that the more space the better and that is usually what we lack. Discipline is the answer but I lack that, too. So, organization is probably the most important thing we can do up front/as we go. I suspect part of your motivation for the request is to get the best inputs on organization for many people.

Here is my take. A table top/bench/desktop/whatever with the test equipment stacked along the wall behind it. Above that would be the shelves with parts, supplies, and misc. A nearby closet with many shelves would be very helpful. A secretary chair with wheels might help in some cases. Needs to be comfy for those long hours at the bench. Good lighting with both overhead and spot. Put the PC under the bench and the KB vertically when not in use. Put the monitor at the end of the bench facing diagonally unless you have a thin screen (big bucks). Laptop is okay in some cases, but bigger $ and less ports/expandability. A network connection would help find info faster.

Okay, that is a start. When I get my new house done and I'm moved in, I will start on my "cheap lab website."

Chris Savage
Parallax, Inc.

I couldn't resist asking Chris to chime in as I thought it might be very interesting to see how the "pros" do it. Chris was kind enough to send in pictures not only of his workbench at home AND at work, but he snuck around with a camera and took pictures of some of his co-workers desks, as well! Thanks Chris, for a glimpse into what the folks at Parallax face on a daily basis!

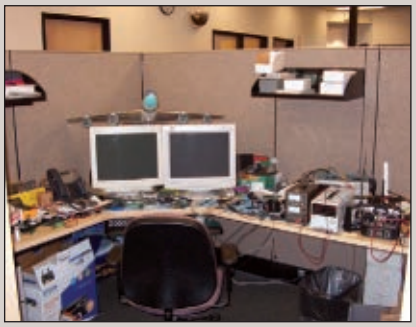

The first picture below is my workstation at Parallax. Not at its messiest, but this is the daily appearance when not working on a project. I generally try to put things away that I am not using to avoid clutter. Typically, I am a neat freak, although with so much dropped onto my desk at work through the day, it's hard to maintain that. The second picture is my main home workbench. I have pretty much everything I need. I do 90% of my projects from this bench. It is wired (serial and USB) into the PC just to the left of it. With dual wide-screen monitors, I can fit a lot of code and information on the screen. What you cannot see in this picture are the stacks of 60-drawer parts cabinets which now (due to space) live in my garage aside my secondary workbench. That bench is where I do all my milling and cutting. Almost every tool at my primary bench also exists at my secondary bench. What doesn't is portable via the laptop. If I need a scope, I use the Parallax USB scope on the laptop. Also, I included pictures of Dave Andreae and David Carrier's cubes at work (at top).

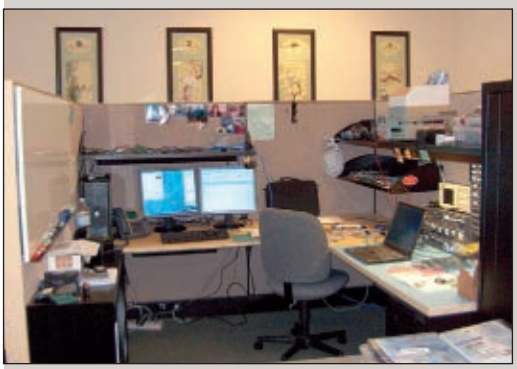

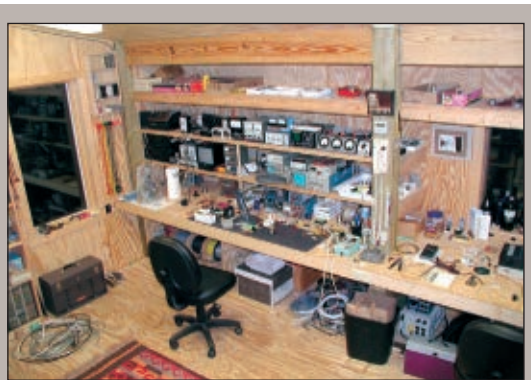

Joe Flamini
White Hall, VA

When I saw the pictures of Joe's self-described "sanctum sanctorum," I have to admit I was both inspired and well ... okay, I'll admit it ... down right envious! His shop would be my idea of a "Man Cave!" Not only does he have a large area that's well organized and sprinkled will tools and test gear, but it appears he has a panoramic window looking out into the forest. Wow!

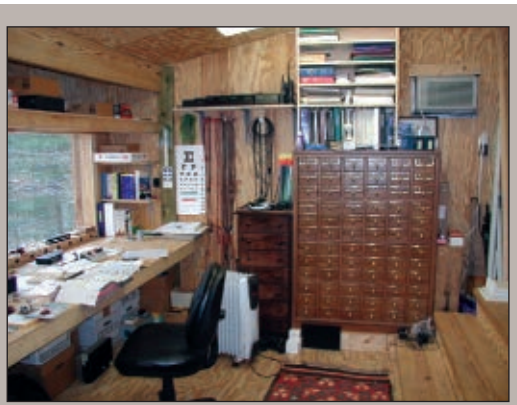

Here's a few shots of my sanctum sanctorum. I keep ongoing (unfinished) projects in project trays on the upper shelf above the bench, and pull them down to work on 'em when I want to. I need to create a more machine-tool-friendly area separate from the electronics (for the drill press, etc.). The metalworking, plastic working, and woodworking stuff is presently in another building. I try to keep 80% of the equipment and tools that I use most within arm's reach of my main work area.

Jeff Duntemann K7JPD
Colorado Springs, CO

NOTE: Jeff has an entire website devoted to the creation and evolution of his electronics shop and workbench area. It's a VERY good read if you're getting ready to build or want to improve your workspace (or just want to dream). I've placed one of the pictures of his shop here, but you should really visit the website if you want to see a very cool shop!

Just got the new N&V *today and saw your request for workshop photos and tips. I have an entire page devoted to the topic. I'm 55 and have had a workshop of my own since I was 13, but it's taken me all this time to get it just right. I do less robotics than I used to, but I still build things, and the general principles are the same no matter what you're building. Thanks again and good luck!* ***www.duntemann.com/12vtubes/shoptips.htm***

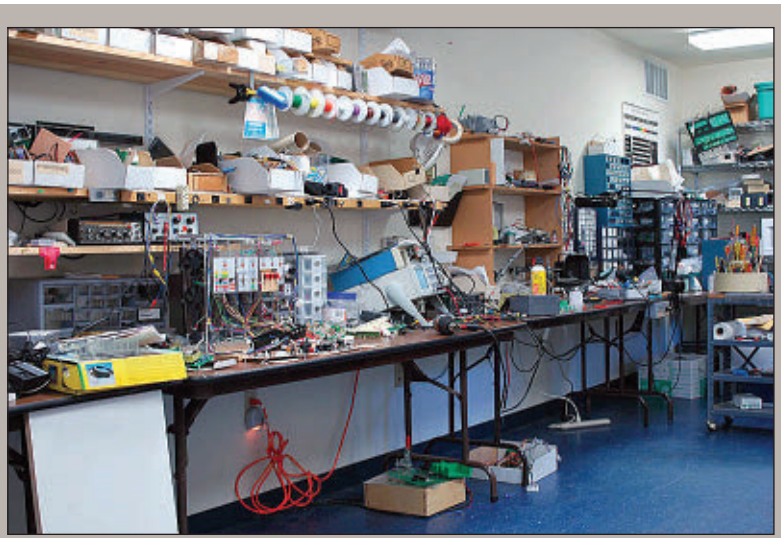

Chad Shumway
Lincoln City, OR

Chad "Chadman" Shumway sent a couple of photos of his workspace. Looks well stocked and commercial at first glance. Sure enough it was. Even though there's a large difference between the necessity of a commercial operation and a home work space, it's amazing to see the similarities. Here's what Chad had to say about his workbench:

Is there a prize for the worst/best clutter? I have to say I am the luckiest hobbiest ever paid to hobby! This is my clutter and it's just the tip of the iceberg really. I wanted to point out a development system you might or might not have covered. I have been studying a bit of assembly, PICBasic, and have just begun my uphill curve to learning C/C++. C development seems the way to go for most MCU development and useful beyond that, as well. I recently went to a Cypress seminar and was introduced to Cypress PSoC Express. I was given the "World Tour" dev board and PSoC Express on a disk. I love this development system! I had a fan controller breadboarded with low/med/high fan output based on thermistor temperature input, in under three hours working on my desk. Given two more hours, I could have had my proto board submitted to my proto board house using Eagle. Five hours to prototype with little experience with MCUs, using a program I barely knew. Awesome! Have a look if you haven't already.

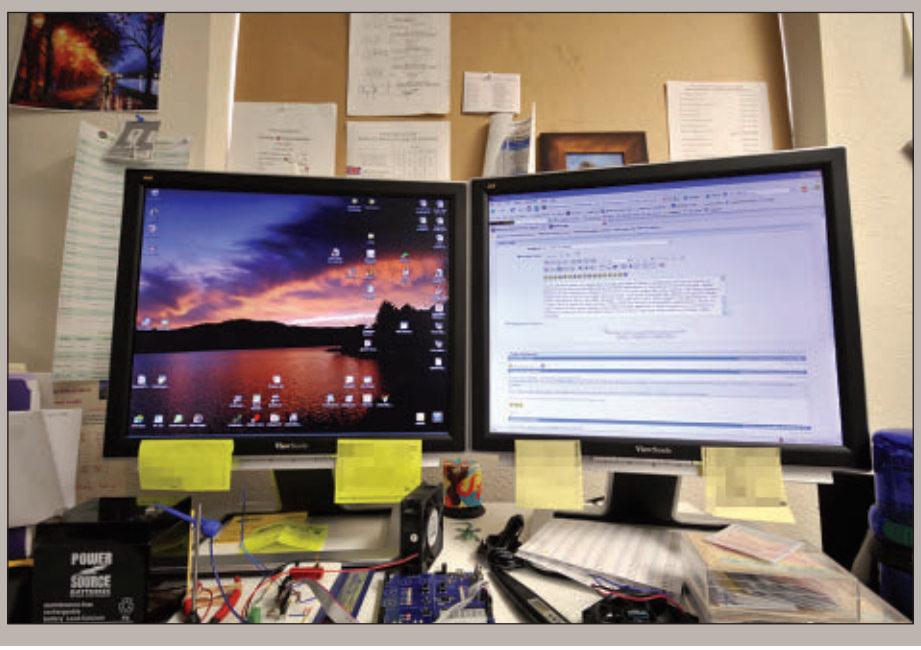

Dave Carpenter
San Jose, CA

Dave sent in some cool photos and some very good advice. Yet another example of an efficient design and good execution resulting in an efficient workspace.

Per your request for bench photos, here is one of my work place in my home.

The work surfaces are purpose-built lab tables purchased at a company surplus sale; two-inch square steel tube with poly-something laminated particle board tops. Square holes in rear corners of the bench allow access to the inside of the rear legs for adding risers.

I built a shelf on risers consisting of 1-5/8 inch 12 ga SuperStrut (local hardware store) inserted into rear bench legs and 13/16 strut used to form the shelf. Quarter-inch ply covers the frame (note another plank, behind, waiting for a second shelf!).

Good ergonomics are essential to avoid body fatigue and pain. I find that the scope and meter displays need to be straight ahead of my eyes without having to look up. Raising the chair to meet a too-high shelf is a poor solution, IMHO.

On shelf, L to R:

- *Two old three-output (0-30V, 0-30V, 0-5V) supplies, one for backup.*
- *A 12V, 20A regulated supply for those car audio repairs.*
- *RadioShack FET meter sits atop the 12V supply.*
- *Assortment of Fluke DMM, Bob Parker ESR, and AADE cap/coil meters.*
- *Tek 2465DVS four-channel scope with integral DMM.*
- *Two HP 33120A arbitrary signal synthesizers for dual-channel audio work.*
- *Audio power amp for confirming preamp sounds (the ear is better than any test equipment!).*

On bench top:

- *Pace 45 temperature-controlled soldering station.*
- *Small, high-intensity incandescent lamp for good lighting*
- *Fluorescent lamp w/integral magnifier for those old eyes.*
- *Several loupes and magnifiers.*

Not visible, just under the shelf:

- *20-outlet power bar w/on-off switch.*
- *Height-adjustable, wheeled lab chair.*

Missing from the photo:

- *Panavice rubber-protected jaw vice with articulated base*

As for workbench design, I think you have to put yourself in the head of the guy/gal who wants to get a bench to replace the kitchen table or whatever as their workspace. I would suggest these areas of discussion:

1) Readily-available sources of benches (Home Depot, Ace Hardware, Sears, etc.) and actually go look at some of those as research.

2) Surplus sources (announcements in newspaper of foreclosure of businesses).

3) DIY means (lumber, SuperStrut, etc.).

4) Design considerations: safety (soldering fume ventilation just came to mind), ergonomics, efficient use of space, storage, etc.). I'd talk about ideas like putting only soldering station on the bench, if possible, and building a shelf (see my photo!) to get all the equipment up so you can have maximum space (that ubiquitous STUFF on the bench notwithstanding) for your actual work.

5) Lighting!

6) Basic equipment (temperature-controlled soldering station, multimeter, power supply, scope).

Those are the ideas off the top of my head. The Yahoo! groups TekScopes, TekScopes2, Test-Equipment, and hp_agilent_equipment have been answering questions I've asked and put forth suggestions, i.e., my bench. You might want to search the archives for those groups at Yahoo! to see if you can glean some more ideas.

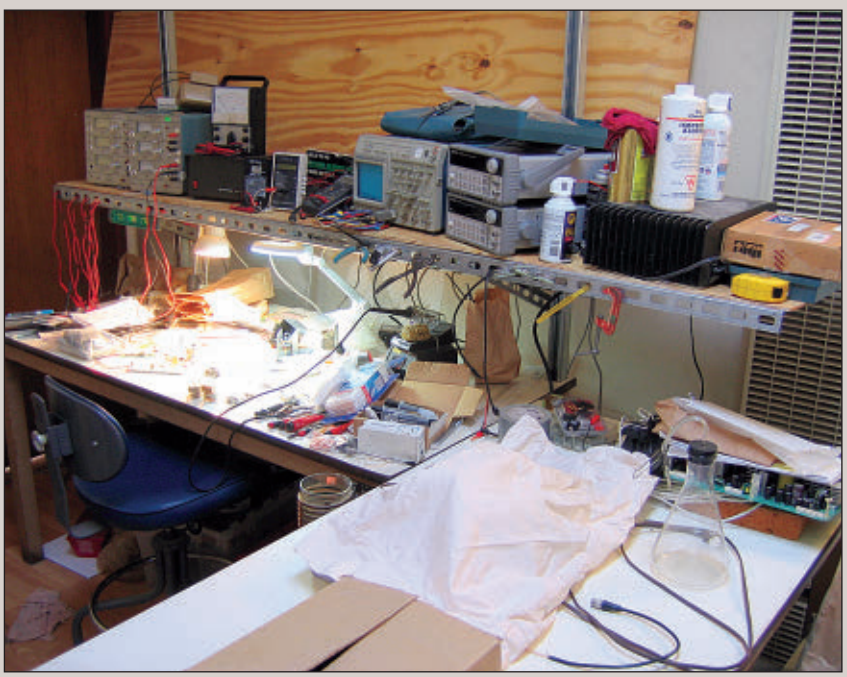

Joe Kissell
Gardner, KS

Joe sent in a neatly labeled picture with each of the items spelled out, so I didn't get to play the guessing game like I did with Rich Syphrit. Here's his info with each of the items and a few tips thrown in for the home electronic hobbyist:

I want to submit my workbench as you requested in the February '08 issue of Nuts & Volts. *I love being organized and am fairly happy with my current setup. I do, however, wish I had left myself some additional room for growth. Also, I have some terrific tools in my arsenal that I think would be great for anyone just diving into the world of electronics. Specifically, I'm referring to items 5, 12, and 13.*

1) Parts box.
2) Storage bins.
3) Tool bag.
4) Oscilloscope – BK Precision 20 MHz, two-channel Model 2125.
5) Box of various resistor values.
6) DMM.
7) Dual isolation transformer with 120 VAC output.
8) Power strip with on/off switch – shut down entire bench with one switch!
9) Breadboard.
10) Desk protector (should upgrade to anti-static mat).
11) Soldering iron – switchable between 15 and 30W. I typically use the 30W setting with a small 15W tip which works great for getting into tight spots. Soldering station is complete with extra set of hands and sponge.
12) EasyPIC3 Development Board – extremely versatile and easy to use board for development of PICs.
13) Two-channel USB oscilloscope/two-channel spectrum analyzer/16-channel logic analyzer/eight-channel logic generator. Great for capturing data on the PC (and much more). Just don't exceed the maximum ratings or you'll be replacing this unit along with your PC mother board!
14) Notebook – you should always use a permanently bound (not spiral like I have here) notebook with numbered pages in order for the patent office to take you seriously.
15) Baby monitor – keep tabs on activity upstairs.
16) Ambient data display: temperature, barometric pressure, and relative humidity.
17) Pegboard.
18) Light and magnification lens.
19) Alligator clip assortment.
20) Test-lead rack.
21) Salvage pile for old projects.
22) Etching chemicals for making your own PCB.
23.) Infrared laser thermometer – Sentry 650.
24) Pint-sized replica of my dream car – 1995 Toyota Supra with twin turbochargers.

I look forward to reading your "Habitat For Hobbies" article.

Earl Schlenk

Another example of a small, efficient design. Earl's bench is also located where he gets some nice daylight. Here's Earl's take on working on electronics at home:

Here is my workbench. My experience in 50 years of electronic and ham radio building projects is space and more space. It seems no matter how much room you have on a bench, it still gets cluttered when in use! I live in an apartment so I am very limited in space. I use a metal 'lazy Susan' to hold my hand tools for easy access. Good lighting is essential, also a head band magnifier. A small rotary tool drill press stand is invaluable for drilling small holes accurately and to prevent breaking of the tiny bits. A vise mounted solidly on the bench is also very important. No amount of tools are too many. I find easy access to hand tools a priority as nothing is more frustrating than having to look for a tool you just have used and it vanished in a pile on the bench! A place to put screws and other small parts during disassembly keeps you from constantly hunting for them. I could go on and on, but I'll stop here. I enjoy your articles in N&V.

I want to thank everyone who sent in photos and apologize again if we didn't have the space to include your workbench in this month's column. I'll try to include a few more in next month's, if space allows. In the meantime, I'd like to encourage everyone to visit the *Nuts & Volts* forum where there is a discussion topic on the Habitat for Hobbies theme. Take a moment to stop by and share your views, ideas, and comments on the workbenches shown here and to add your own thoughts and pictures to the thread there. See the resources section for a link to the *Nuts & Volts* discussion forums.

That's all the room we have for this month. I'll be finishing up next month with some comparisons, suggested workbench layouts, and (fair being fair) pictures of my own workbench (a.k.a., Disaster Central). See you next month! **NV**

HELPFUL RESOURCES

- Parallax: **www.parallax.com**
- The *Nuts & Volts* Forum Discussion: **http://forum.servomagazine.com**
- The Robot Group: **www.TheRobotGroup.org**

WORKBENCH DESIGN CHALLENGE

Can it be done?
The Challenge: Design and equip a fully-operation, entry-level electronics workbench.
The Catch: Your budget is no more than $100 USD.
The Fine Print: Your sole source for items is *Nuts & Volts* vendors

1st place prize: A Parallax USB Oscilloscope
2nd place prize: A Parallax Propeller Starter Kit
3rd place prize: A Parallax BASIC Stamp 1 Starter Kit

During the creation of this article, I was discussing workbenches with my fellow roboteers and we started to debate what was "essential" to an electronics workbench. It came down to the old "if you were on a desert island" hypothetical situation where you have to pare your choices down to the bare necessities. It was fun and interesting to listen to seasoned engineers and "young whipper-snappers" spout off about what was essential and what was a waste of bench space and money. I decided it might be fun to extend the challenge to you, the readers.

So, here's the challenge details. You design a complete, fully-operation, entry-level electronics workbench for under $100, keeping in mind that you must do so using only items from advertisers and vendors listed in the pages of *Nuts & Volts*. Your entry should be submitted in the form of a list with a line for each item, its associated part number, the vendor name, and the item cost. Make sure the total is $100 or less.

So, do you think it's possible to stock a workbench on such a stingy budget, including tools, test equipment and the like? If you think you have the magic formula, submit your list of items and prices to vern@txis.com. The best entries (as judged by vote of the totally impartial, tribunal of Me, Myself, and I) will have their listing published in the September Personal Robotics column and will win one of the prizes listed above from Parallax! In the case of a tie, the first response wins. I would like to extend a special thank you to Parallax for their generous offer to provide very cool prizes for this (okay, I'll admit it, somewhat silly but fun) contest!

Official rules are posted on the Nuts & Volts forum.

We have over 170 related titles in our webstore!!

The Nuts & Volts **WEBSTORE**

"EDITOR'S PICKS"

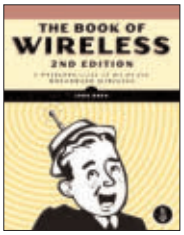

The Book of Wireless

This up-to-date introduction to broadband connectivity is an approachable (easy on the technobabble) and yet comprehensible introduction to setting up and maintaining a broadband network in your home or office. It covers the basics of hardware, including how to configure access points, as well as the more esoteric uses of VoIP. Written for the computer literate who have yet to make the move from a wired to wireless lifestyle. **$26.95**

Forbidden LEGO

The title says it all. If you want to try your hand at building a variety of non-lethal projectile weapons, then this is the book for you. Although the projects described by this book definitely require safety glasses, they're also a fun way to get your head around using LEGOs for engineering prototypes. **$24.95**

Editor Bryan Bergeron's recommended reads.
Find these and many more great titles in the *NUTS & VOLTS* Webstore!

ELECTRONICS

Programming PIC Microcontrollers with PICBASIC
by Chuck Hellebuyck

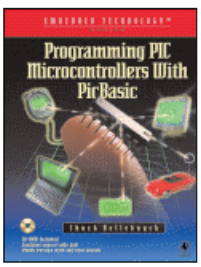

This comprehensive tutorial assumes no prior experience with PICBASIC. It opens with an introduction to such basic concepts as variables, statements, operators, and structures. This is followed by discussion of the two most commonly used PICBASIC compilers. The author then discusses programming the most common version of the PIC microcontroller, the 15F84. The remainder of the book examines several real-world examples of programming PICs with PICBASIC. **$64.95***

Programming and Customizing the PICAXE Microcontroller
by David Lincoln

Best Seller

Here's everything you need to harness the power of PICAXE, the inexpensive yet versatile chip that's taken the electronics community by storm. This beginner-friendly guide from IT pro and PICAXE expert David Lincoln shows you just what Revolution Education's PICAXE can do — and helps you make it do it! Packed with ready-to-build projects for all the flavors of PICAXE. **$39.95**

Electronic Circuits — Fundamentals & Applications: Third Edition
by Mike Tooley

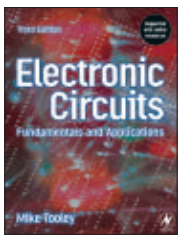

In *Electronic Circuits*, Mike Tooley provides all the essential information required to get to grips with the fundamentals of electronics, detailing the underpinning knowledge necessary to appreciate the operation of a wide range of electronic circuits, including amplifiers, logic circuits, power supplies, and oscillators. The third edition now offers an even more extensive range of topics, with extended coverage of practical areas such as circuit construction and fault finding, and new topics including circuit simulation, electronic CAD, and a brand new chapter devoted to the PIC microcontroller. **$36.95**

Programming the PIC Microcontroller with MBASIC
by Jack Smith

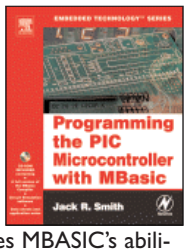

No microcontroller is of any use without software to make it perform useful functions. This comprehensive reference focuses on designing with Microchip's mid-range PIC line using MBASIC, a powerful but easy to learn programming language. It illustrates MBASIC's abilities through a series of design examples, beginning with simple PIC-based projects and proceeding through more advanced designs. **$65.95***

Getting Started in Electronics
by Forrest M. Mims III

NEW!

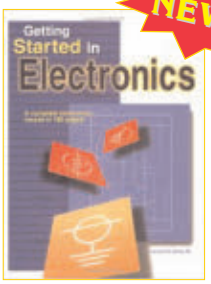

This is a complete electronics course in 128 pages!
Author Forrest Mims teaches you the basics, takes you on a tour of analog and digital components, explains how they work, and shows you how they are combined for various applications. Includes circuit assembly tips and 100 electronic circuits and projects you can build and test.
Forrest M. Mims, III, has written dozens of books, hundreds of articles, invented scientific devices, and travelled to the Amazon for NASA. He loves to share his knowledge with eager students!
$19.95*

Build Your Own Electronics Workshop
By Thomas Petruzzellis

YOUR DREAM ELECTRONICS LAB IS WAITING INSIDE!

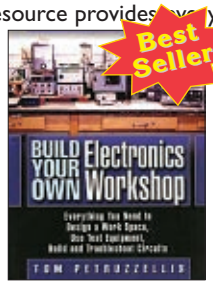

Best Seller

This value-packed resource provides everything needed to put together a fully functioning home electronics workshop! From finding space to stocking it with components to putting the shop into action — building, testing, and troubleshooting systems — popular electronics author Tom Petruzzellis' *Build Your Own Electronics Workshop* has it all! And the best part is, this book will save you money, big time!
Reg **$29.95** **Sale Price $24.95**

Electronics: A First Course Second Edition
by Owen Bishop

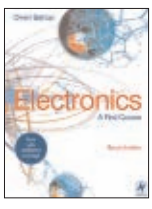

Electronics: First Course starts with the basics of electricity and component types, and introduces students to practical work almost straightaway. No prior knowledge of electronics is assumed. The second edition now has additional applicability to BTEC First Electronics from Edexcel with coverage of fundamental topics required by students of this qualification, as well as other essential new topics that reflect recent technological developments. **$36.95**

Or Order online @ **www.nutsvolts.com**

CALL **1-800-783-4624** today!

THE EVIL GENIUS SERIES

Evil Sale!
$22.95
If you like books on projects, check out The Evil Genius Series. We have all 20 books in stock and ready to ship.

Buy three or more books from this series and get FREE USPS shipping! (US ONLY)

Go to **www.nutsvolts.com** Click Store/Books/The Evil Genius Series; check out the Digital Sampler on four publisher-selected titles.

Newnes Guide to Television and Video Technology
by K. F. Ibrahim

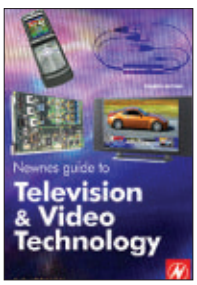

Starting with TV fundamentals, the bulk of the book covers the many new technologies that are bringing rowth to the TV and video market, such as plasma and LCD, DLP (digital light processing), DVD, Blu-ray technology, Digital television, High Definition television (HDTV), and video projection systems. **$34.95**

PIC Microcontroller Project Book
by John Iovine

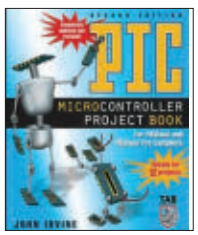

The PIC microcontroller is enormously popular both in the US and abroad. The electronics hobbyist market has become more sophisticated. This new edition is fully updated and revised to include detailed directions on using both versions of the microcontroller, with no-nonsense recommendations on which is better served in different situations. **$29.95**

Encyclopedia of Electronic Circuits, Volume 7
by Rudolf F. Graf / William Sheets

Publish Date: August 31, 1998

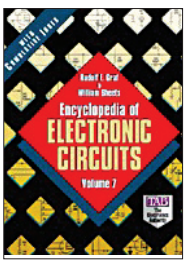

An extensive library of 1,000 circuits from the bestselling, seven-volume *Encyclopedia of Electronic Circuits*. A virtual treasurehouse. An invaluable reference tool for every hobbyist, technician, student, and design professional. **$39.95**

CD-ROMS

CALL 1-800-783-4624 today!
Or Order online @ www.nutsvolts.com

PROJECTS

Nixie Clock Kit

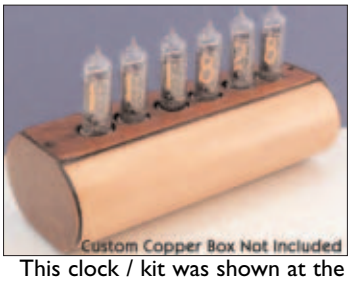

As seen on the October 2006 cover

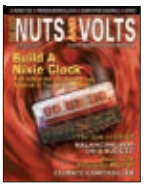

Nixie tube clocks fuse the spirit, drama, and eerie beauty of cold war technology with modern inner works to create uncommon handcrafted timepieces. This clock / kit was shown at the October 2007 MAKER Faire in Austin, TX by *Nut & Volts Magazine* and was very well received as a novel way to show the Nixie tubes. Plus, it's a great kit for all levels of electronic experience.

For more information, please check out your October 2006 issue or go to our website @ www.nutsvolts.com

Subscriber's Price **$131.95** Non-Subscriber's Price **$139.00**
Both include an article reprint.

High Voltage Power Supply Kit

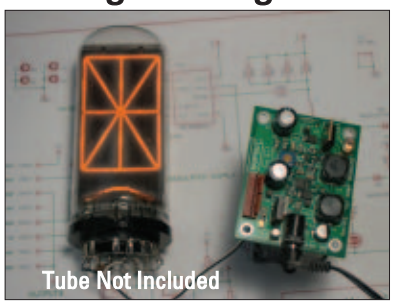

Best Seller

As seen on the April 2008 cover

It's fun to collect and experiment with forgotten technology!
But, you'll need a stable high voltage power supply to get started.
To conserve space, this kit uses a mix of TH and SMT components. Sold as a kit or the printed circuit boards can be puchased separately.
For more information, please check out your April 2008 issue or go to our website @ www.nutsvolts.com

KIT Subscriber's Price **$49.45** Non-Subscriber's Price **$54.95**
PCB Subscriber's Price **$17.95** Non-Subscriber's Price **$20.95**
Both include an article reprint.

Garage Door Alarm Kit

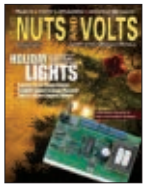

As seen in the November 2007 issue

For more information, please check out your November 2007 issue or go to our website @ www.nutsvolts.com
Subscriber's Price **$49.95**
Non-Subscriber's Price **$57.45**
Kit includes article reprint, complete instructions, parts list, and hole drilling templates.

Digital LED Conversion Kit

200% More Efficient

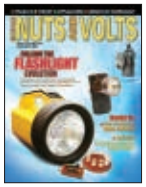

As seen on the February 2008 cover

Turn all your old style bulb flashlights into bright, five LED, energy efficient, 4.5 VDC digital flashlights.
For more information, go to our website @ www.nutsvolts.com
Without Flashlight Housing **$22.49**
With Flashlight Housing **$25.95**

Both include an article reprint.

Voice Changer Kit

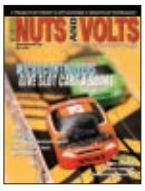

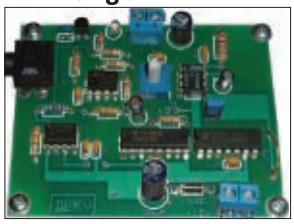

Have fun with the whole family with this project. Put your newly ***changed*** robotic ***voice*** on your outgoing phone message, or use it on those annoying telemarketers!
For more information, please check out your May 2008 issue
Subscriber's Price **$39.95**
Non-Subscriber's Price **$45.95**
PCBs can be bought separately.
$ 20.95*
Both include an article reprint.

NEW!

Hydrogen Powered Racer

With this kit, you now can see and feel the future of energy generation in your own hands! Recently named as one of the Best Inventions of 2006 by *Time Magazine*, the H-racer is now the best selling fuel cell product in the world. **For more info, go to our online store at www.nutsvolts.com. $115.00***

Magic Box Kit

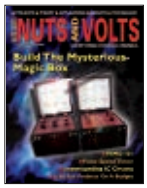

As seen in our April 2007 issue.

This unique DIY construction project blends electronics technology with carefully planned handcrafts-manship. Its delightful innovation will surely amuse you and your audience.
Subscriber's Price **$41.95**
Non-Subscriber's Price **$47.95**
Both include an article reprint.

The Amateur Scientist 3.0 The Complete Collection

by Bright Science, LLC

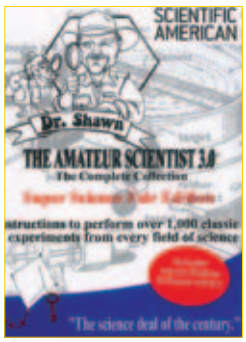

There are 1,000 projects on this **CD**, not to mention the additional technical info and bonus features. It doesn't matter if you're a complete novice looking to do their first science fair project or a super tech-head gadget freak; there are enough projects on the single CD-ROM to keep you and 50 of your friends busy for a lifetime! **$26.99**

WE ACCEPT VISA, MC, AMEX, and DISCOVER. Prices do not include shipping and may be subject to change.

Attention **Subscribers ask about your discount on prices marked with an ***

The Nuts & Volts **WEBSTORE**

ALTERNATIVE ENERGY SECTION

Designing & Building Fuel Cells
by Colleen Spiegel

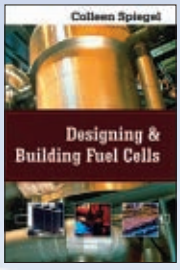

Designing & Building Fuel Cells equips you with a hands-on guide for the design, modeling, and construction of fuel cells that perform as well or better than some of the best fuel cells on the market today. Filled with over 120 illustrations and schematics of fuel cells and components, this "one-stop" guide covers fuel cell applications, fuels and the hydrogen economy, fuel cell chemistry, thermodynamics and electrochemistry, fuel cell modeling, materials, and system design, fuel types, delivery, processing, and much more. **$89.95***

Solar Hydrogen Power Generation Set

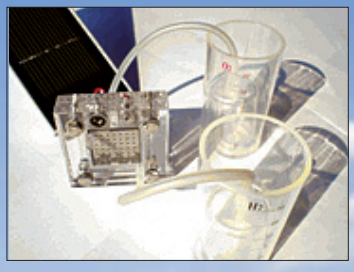

The Solar Hydrogen Generation Set includes a solar cell, a PEM reversible fuel cell, as well as oxygen and hydrogen gas containers. The set only needs pure water to create hydrogen and produce electricity. Perfect for science labs, classroom use, or demonstration purposes.
$67.00

Do It Yourself Guide to Biodiesel
by Guy Purcella

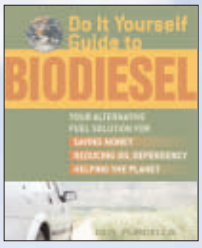

Contains the most current and complete information available for would-be biodiesel makers. This book offers a step-by-step path from the initial desire to do something good for the environment to the final stage of filling the tank with low-cost fuel. Readers are given a complete understanding of what biodiesel is and how to make it properly and safely. There is even a section on pitfalls to avoid, as well as the author's personal tips and tricks. **$15.95**

Alternative Energy Demystified
by Stan Gibilisco
Publish Date: October 23, 2006

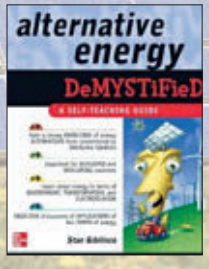

The fast and easy way to get up-to-speed on alternative energy. Because of current events, geopolitics, and natural disasters, the cost of fuel is front and center in our lives. This book provides a concise look at all forms of energy, including fossil fuels, electric, solar, biodiesel, nuclear, hydroelectric, wind, and renewable fuel cells. You will get explanations, definitions, and analysis of each alternative energy source from a technological point-of-view. **$19.95**

Pathways to a Hydrogen Future
by Thomas E. Drennen and Jennifer E. Rosthal
Publish Date: October 15, 2007

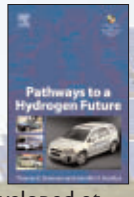

Pathways to a Hydrogen Future seeks to untangle the competing visions of a hydrogen economy, explain the trade-offs and obstacles, and offer recommendations for a path forward.
The results are based on a detailed simulation model developed at Sandia National Laboratories: "The Hydrogen Futures Simulation Model (H2Sim)." The H2Sim is a high-level strategic tool for evaluating the economic and environmental trade-offs of alternative hydrogen production, storage, and transportation. **$94.95***

The Complete Idiot's Guide to Solar Power for Your Home
by Dan Ramsey / David Hughes
Publish Date: May 2007

The perfect source for solar power — fully illustrated. This book helps readers understand the basics of solar power and other renewable energy sources, explore whether solar power makes sense for them, what their options are, and what's involved with installing various on- and off-grid systems. **$19.95**

MUST HAVE

Pocket Ref
by Thomas J. Glover

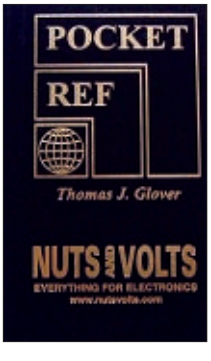

This great little book is a concise, all-purpose reference featuring hundreds of tables, maps, formulas, constants, and conversions. AND it still fits in your shirt pocket! Goes where you go! **$12.95**

Special Book Offer

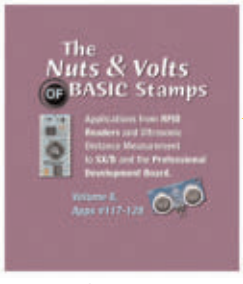

SAVE 35% + FREE SHIPPING!

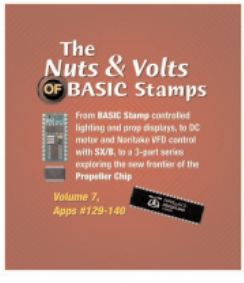

Buy both these books together in the month of June 2008

(*The BASIC Stamp Vol 6* and *The BASIC Stamp Vol 7*)
and save 35% off the list price. Plus get free shipping!!

Call 800 783-4624 or order online @ www.nutsvolts.com

List Price $14.95 Sale Price $ 9.75 **List Price $14.95 Sale Price $9.75**

CLASSIFIEDS

COMPONENTS

RF PARTS™ CO.
Tubes, Transistors, Power Components
Email: rfp@rfparts.com • Web: www.rfparts.com
800-737-2787 Fax 888-744-1943

KITS / PLANS / SCHEMATICS

QKITS.COM

K8063 – LED Display Kit w/ Serial Interface
ELECTRONIC KITS & TEST EQUIPMENT
1-888-GO 4 KITS

Electronic Kits
• Fun and Educational
• Discount White and Blue LEDs
• Quantity Discounts

www.bakatronics.com

uM-FPU V3.1
Floating Point Coprocessor

32-bit IEEE 754
SPI or I2C
DIP-18, SOIC-18
Fast – Easy to Use
Extensive floating point support, GPS input, FFT, 12-bit A/D, matrix operations, user-defined functions.
www.micromegacorp.com

Easy to use, efficient
Voltage Regulators!

• Integrated capacitors (no external components)
• Switching regulators give 80+% efficiency
• Drop-in replacement for LM78xx
• Step down, step up, fixed and adjustable versions
Starting at $15
dimensionengineering.com

LEDs
Super Brights from 20¢
RGB Color Mixing 30 Pack $6.99
Assortment 120 Pack $24.99
Shipping from $3.00
Alan-Parekh.com/Store

DESIGN/ENG SERVICES

*Circuit board layouts
*Prototype assemblies
WWW.OSPREYELECTRONICS.COM
Convert your sketch or print into a quality pcb for a reasonable price. Visit us on the web or call Osprey Electronics at (208) 664 1089 (USA)

LCDs/DISPLAYS

As low as $7.99ea
* Dark text on Yellow background 20x4 LCD
* High contrast & wide viewing angles
* HD44780 equivalent controller built-in
* Bright LED Back light
Order online at:
www.411techsystems.com

SECURITY

WIRELESS FIELD STRENGTH TESTER
With Log Periodic Antenna

Detects Bugs & Hidden Cameras
Identifies Hot & Cold spots
Measures baseline RF levels
Discovers hacker-site locations
Aims & Aligns far-distant antennas
Locates cable leaks & connector problems
1 MHz to 8 GHz Bandwidth
DETECTS 5.8 & 2.4 GHz mW SIGNALS @ 20 ft. & PINPOINTS THEIR LOCATION
Model ZC 300
SELECTABLE ANTENNA OPTIONS
COAXIAL INPUT - For directional external antennas
INTERNAL ANTENNAS - No adjustments needed
LOG - MID - LINEAR DETECTION MODES
Weakest distant signals detected and location pinpointed
DIGITAL/ANALOG SIGNAL DIFFERENTIATION
Enhanced cell Phone, video, computer data & pulsed signal detection
$599 with directional 1.8-6.4 GHz Log Periodic Antenna
ALAN BROADBAND CO.
93 ARCH ST.
REDWOOD CITY, CA 94062
(650) 369-9627, (888) 369-9627
FAX: (650) 369-3788
WWW.ZAPCHECKER.COM

CONNECTORS/WIRE/CABLE

The RF Connection
213 N. Frederick Ave., Ste. 11NV
Gaithersburg, MD USA 20877
http://www.therfc.com/

Complete Selection of MIL-Spec Coax, RF Connectors and Relays

UG-21B/U N Male for RG-213/214 .$5.00
UG-21D/U N Male for RG-213/214 .$3.25
N Connectors for 9913/Flexi4XL/9096
UG-21B/9913 .....$6.00 / Pins Only.....$1.50
UG-21D/9913 ..$4.00 / Extra Gasket.$0.75
UG-176/U Reducer RG-59/8X, $0.25 or 5/$1.00
UG-175/U Reducer RG-58/58A, $0.25 or 5/$1.00
Silver Teflon PL-259/Gold Pin, $1.00 or 10/$9.00

Call for Specials of the Month
Full Line of Audio Connectors for Icom, Kenwood, and Yaesu

8 Pin Mike Female	$2.50
8 Pin Mike Male Panel	$2.50
13 Pin DIN for Kenwood	$2.75
8 Pin DIN for Icom	$1.00
8 Pin DIN for Kenwood	$1.50

Prices Do Not Include Shipping
Prices subject to change without notice.

Orders 800-783-2666
Info 301-840-5477
FAX 301-869-3680

BOOKS

HOBBYIST BOOKS
FROM $2.95
"Will fascinate,captivate"
A.R. Winstanley, Electronics Editor
http://stores.lulu.com/thomasscarborough

PIC® Microcontroller Book
NEW
C What Happens
Using The CCS C Compiler
http://www.sq-1.com
SQUARE 1 ELECTRONICS
(208) 664-4115
Hayden, ID USA

ROBOTICS

$29.95 MaxSonar-EZ1
(MSRP)

High Performance Ultrasonic Range Finder
- serial, analog voltage & pulse width outputs
- lowest power - 2mA
- narrow beam
- very easy to use!
www.maxbotix.com

ARobot Kit from Arrick Robotics uses the Basic Stamp II. Quality metal construction. Easy to assemble and very expandable.
$235.00
www.robotics.com/arobot

SCSI
I-U320 50Pin-68Pin-80Pin
1 to 8 Bay Case Enclosures
Adapters Cables Terminators
Low Prices - Qty Discounts!
(Also FireWire, USB, Video)
www.mcpb.com

HARDWARE WANTED

DEC EQUIPMENT WANTED!!!
Digital Equipment Corp. and compatibles.
Buy - Sell - Trade
CALL KEYWAYS 937-847-2300
or email buyer@keyways.com

SOLAR PRODUCTS/KITS

BATTERY DESULFATORS
www.wizbangplus.com

OSCILLOSCOPES

Bargain LCD Scope!
Portable, benchtop 25Mhz 2-ch color LCD Scope. Download waveforms via USB1.1 to PC. 7.8" 640 x 480 Color LCD 3.5lbs. Sampling Rate 100 MS/s. Volt/Time Automatic msmt Peak-to-peak Value, Average, RMS, Frequency and Cycle. FREE 1x/10x probes, USB cable. Compare with expensive LCD scopes!
PDS5022S only $325!
Battery-powered PDS5022S-BAT $399!
Saelig unique electronics
1-888-7SAELIG
info@saelig.com
www.saelig.com

Do you know how many watts (YOUR MONEY) are going down the drain from "THE PHANTOM DRAW?"
The KILL A WATT meter is the best way to help you determine your actual energy draw in ON and OFF home appliances.
To order call 1 800 783-4624 or online www.nutsvolts.com
$29.95 plus S&H

Blow Out Special $9.95!
WWW.SERVOMAGAZINE.COM

SATELLITE

Satellite Dish Parts
C-band • 4DTV • FTA
Big Dish Is The Hit of The Party!
NEW! More Channels on C-band!
• Bigger Packages
• Better Values
Call Today & See The Difference!
www.skyvision.com/programming
Skyvision 800-500-9268

AUDIO/VIDEO

www.MAT-CO.com
4 Channel Color Wireless Camera Kit
$99/kit
CMI-04WL
- Mini Color CMOS Camera
- 1 Lux
- 380 TVL
- 2.4 GHz
- Good for 650 ft in open
- Power supplies for both camera & receiver included
- Output power: 10 mW
(800)719-9605 myorder@matco.com

www.MAT-CO.com
Sunglasses Camera & Pocket DVR Kit
$199/kit ~~$239~~
PSG-201MP
- Color CMOS Camera
- 1 Lux, 420TVL
- DVR Size: 60 x 90 x 17.5mm
- Built-in 512M Flash Memory Card, for 8 hrs recording
- Built-in Lithium battery
- Supports TV In/Out
(800)719-9605 myorder@matco.com

www.mat-co.com
Pocket MP4 / Mini DVR
DVR-4001
- Record/Playback MP4 Movie, MP3 Music & JPEG images
- Built-in 512 MB SD Card, for 8 hrs video
- Built-in Lithium battery
- Support TV In/Out
- USB for file transfer
- SD Card slot for additional card $199/ea
(800)719-9605 myorder@matco.com

MISC FOR SALE

HUGE CLOSE-OUT SALE!
All kinds of electronic products and parts!
Test equipment, schematics, tubes, audio-video equipment ... too numerous to list. Call for availability.
215.271.1138 or 215.468.3028

Warehouse Sold, Must Liquidate
Over 20,000 speakers, $100,000 of speaker parts, glue, speaker boxes and grilles, crossovers, induction heaters, magnitizers, spot welders, chart recorders, transformers, variacs, industrial ovens, motors, electronic equipment.
New Address: ISE, 15960 FM-800, San Benito TX, 78586
Details: www.isesurplus.com or call 956-444-0004 / 888-351-5550 (toll free)

Looking for robots?
www.servomagazine.com

MICROCONTROLLERS

Off-The-Shelf Firmware
Why re-invent the wheel?
- ZigBee - IEEE 802.15.4 - IrDA - Security Keys -
- Memories - LED & LCD Drivers - Codecs - Math -
- Sensor Drivers - Logic -
...all these and more at www.hexwax.com

3 amazing advances in 1 microcontroller programmer
#1: Upgrade customers by email or airmail
#2: Limit the copies your subcontractor makes
#3: Price busting $32 at Mouser & DigiKey
www.flexipanel.com
It's the tiny TEAclipper
FlexiPanel

MicroStamp11
World's Smallest 68HC11 Microcontroller Module!

• telemetry
• microrobotics
• smart toys
• animatronics
• model railroading
• home automation

- tiny (1 by 1.4 in.), light-weight (0.5 oz.)
- on-board 5V reg., crystal, & reset chip
- choice of 8K or 32K EEPROM
- or 32K RAM + 32K EEPROM (64K version)
- SCI, SPI, Output Compare and Input Capture channels, timer, pulse accumulator
- all 14 I/O lines and 2 interrupt lines brought out to versatile 20-pin connector
- program in BASIC, assembler, or C
- easy code-loading with Docking Module
- Starter Packages:*
  - 8K EEPROM (#MS11SP8K).....$49
  - 32K EEPROM (#MS11SP32K)...$77
  - 32K EE/32K RAM (MS11SP64K)$90

** includes MicroStamp11, manual, PC software (assemblers, SBASIC compiler, MicroLoad utility, and sample programs), serial cable, Docking Module, & accessories.*

www.technologicalarts.com
Toll-free (USA & Canada): 1-877-963-8996
Visa • MasterCard • Discover • Amex

PIC Development Board
SUPPORTS CURRENT AND FUTURE 8-BIT PIC MICROCONTROLLERS UP TO 40 PINS !!! PICIO/12/16/18 !!!
$49
INLANDMECH.COM

PCB SOFTWARE

EXCLUSIVE U.S. DISTRIBUTOR

YOUR COMPLETE SOLUTION!
• PCB Design
• PCB Simulation
• CAD/CAM Menu
121747, Hobby Vers., $175
121743, Pro. Version, $275
www.KELVIN.com

EDUCATION

The Technical Education Press Self-Paced Basic Electronics Courses & NI Multisim 10 With On-Line Technical Support. Any two courses plus NI Multisim 10 (Electronics Workbench), $100. For more information, go to
http://ttep.home.att.net
or ttep@att.net

WhiteSmoke Survey answers from the quiz on page 64.

1- a (19%); 2 - a (24%)
3 - b (3.5%); 4 - b (38%)
5 - b (27%); 6 - b(27%)
7 - b (30%); 8 - c (31%)
9 - a (29%); 10 - c (29%)
11 - c (40%); 12 - a (28%)

0 Wrong — You are a champion speller

1 - 4 Wrong — Average. Use spellchecker and proofread carefully.

5 - 8 Wrong — Use spellchecker, proofread carefully, and learn one new word a week.

9 - 12 Wrong — Use spellchecker, get someone else to proofread, and learn one new word a week.

 continued from page 11

law used that stuff on her bad knees. It sure was foul smelling stuff. Liked to take the hide right off. I had some around here for a while, but finally threw it away. I sure am glad I did.

Great article. I'll be looking for your next installment on this device.

Emmett
Fellow *N&V* reader

P.S. Did you notice the ad about Leah Buechley developing the sew-able microcontroller? Now that's something we can really use.

I just bet you got all sorts of email on this article. I saw in this article and heard a reference to a gurdel spring in the Retroencabulator video. My question is, is this gurdel spring the same or similar to the girdle spring used in WWII during "Operation Petty coat?"

Great article!!

Walton Ussery

You got me good. Hook, line, and sinker! Well done!

Jay Donaldson

Thanks for the laughs. It was a tradition that magazines would publish a special article after 25% of the new year had passed.

I like robotics. I don't own any hardware. I don't know where to start. I followed Vern Graner's article up to the mounting bracket and then checked the mast head for a date.

Here is a suggestion ...

There is a generator you can build in your garage. All you need is a lawn mower motor (use your lawn mower), automotive alternator (temporally remove the one in your car) and a very special set of magnets (from a favorite *Nuts & Volts* advertiser). You must install the magnets in the alternator. The generator you build creates a potential of electrons with negative spin. Today, we only use electrons with positive spin. This makes appliance selection easier for the consumer market. Connect your soldering iron to a source of negative spin electrons and it freezes up. Connect an ordinary incandescent lamp, and it will absorb light. You will see a strange dark halo around the glass envelope. Connect a vacuum tube radio to a source of negative spin electrons and it becomes a transmitter! You will, however, need a negative spin receiver. Of course, negative spin electrons have been abandoned today.

I am not making this up. I saw it in *Radio & Electronics Experimenter*. I did not have to cut grass for a month after I broke my dad's mower.

Randolph "Big Fish" Romanov

Thanks for the great article! When the Digiencabulator goes into production, please let me know. I will connect it to my flux capacitor that Doc Brown promised to send to me and email the results to you.

The timeframe is April 1, 2009 or thereabouts.

Thanks again for the info.

Gary Gugino

It was a delight to see that Parallax is going to be coming out with a Digiencabulator at a (hopefully) reasonable cost!

This brought back some great memories. You see, years ago I designed and built my own version for a local science fair. I called mine the BeeEssencabulator. The first iteration worked relatively well, but then I realized that if I added a feedbagback loop from the tremi pipe to the primary feastock ring, a reasonance would be induced in and emitted from the duodenal analis tube, so that the unit would be self-powdered after an initial warm-up period.

Of course, this is not a perpetratorial motion machine, but, in fact, it gains energy from the relative asynchronous motion of the earth vs. the sun and moon. At the time, I called this "Moon Power." During my college days, my friends and I enjoyed demonstrating Moon Power to various folks around town, especially young ladies we were attempting to impress. Those were the days!

Unfortunately, I misplaced my BeeEssencabulator sometime when I moved from college back into my parent's basement.

Anyway, keep up the good work!

Jim Stegman
Cincinnati, OH

Thank you so much for the in-depth look at such an exciting, bleeding edge piece of technology! We are very lucky indeed!

Although very few have had a chance to work with one of these new ones as you have, I have a vast amount of experience using the older retro models. As a matter of fact, in 1984 at just 18, I received a Doctorate in Tubotics from the University of Cowahoga.

One thing I need to emphasize to those using the newer version such as yours:

Be sure that the manicular tubes do not become disengaged at the diode base of the gigadrive defibrulator flange. This could result in an issue with the DHMO gas escaping. Thanks for a great article, and I promise to try not to let the smoke out!

Chris Hurd
Cazenovia, NY

Loved Vern Graner's article on the Digiencabulator. I have two of them. They go well with my supercal-ifragilisticexpialodotious-ulators. I can't seem to get it to pull less than 120 frigoamperes though — any ideas? I think the TCP/IP-123/SKIDOO code I wrote for it had too much dihydrogen monoxide in it so it simply was too light to be taken seriously by the Z80/PIC/Atmel/6502/Pentupmeum processor. On a related note, I'm going to sell off my supply of shennano gates and was wondering if you were interested.

Or, perhaps you can just explain the true purpose of your article. Want to know if anyone's awake?

Jeff G.
Long time reader of *Nuts & Volts*

I studied Figure 6, the CAD drawing of the Digiencabulator and could not see how this could work. Then, I realized that it was using the wrong hexnuts. I've included a drawing (Figure 4) that shows the proper ambihelical hexnuts. Thanks.

Gary Emmich
Sparta, NJ

Figure 4

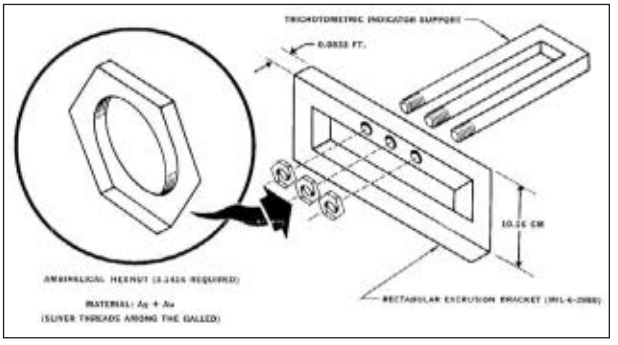

NOT FOND OF FOOL'IN

The bar has been lowered. Shame on *Nuts & Volts* for publishing such a stupid article. For an April Fool's joke, it sucks. Not funny, not entertaining, just plain stupid!!! Old stuff to boot. One page of a good hoax would have been great. Come on *Nuts & Volts*, you can do better.

Pigpickins

Response: Thank you for taking the time to write. I really do appreciate when folks provide feedback (good or bad) as I am constantly trying to improve my writing skills.

I'm sorry the content of the Personal Robotics Column in the April issue of Nuts & Volts *was not to your liking. So far, yours is the sole negative feedback I've received on the article. You are correct in that the subject of the article was "old" as it was a repackaging of a classic April fool's joke that originated with General Electric in the 1960's (**http://en.wikipedia.org/wiki/Turboencabulator**).*

*The "Turboencabulator" was considered funny enough to have been copied and updated since then by such companies as Chrysler (**www.youtube.com/watch?v=pbVY5teBzlg**) and Rockwell Automation (**www.youtube.com/watch?v=lVZ8Ko-nss4**), not just once, but twice (**www.youtube.com/watch?v=ya2huA-VDfw**). I added and embellished the concept with some other obscure technological April Fool's jokes that I had enjoyed from around the Internet (TCP-IP/OCP being one of my favorites). I hoped to introduce these to some readers that may never have seen them, and reintroduce them to some who would consider them old friends. Please don't blame* Nuts & Volts *for the content as I am the sole author and they simply print what I provide to them. I hope that my future columns will be more to your liking.*

Just goes to show the truth of old adages, "Dying is easy, comedy is hard" and, of course, "there's no accounting for taste."

— Vern Graner

SHEDDING LIGHT ON LEDs

The Railroad Crossing Signal project in the December '07 seemed like a fun thing to do since I am a train person. However, there seems to be something missing in the schematic shown. Looking at the Parts List, there looks like there should be four red LEDs, as well as one IR LED.

I'm guessing that the LED1 shown on the far left of the drawing is the IR LED since it can only have one state, i.e., turned on, since it goes from +9V to R1 to ground. If I guessed right, one of the red LEDs — the one also labeled as LED1 — is missing in the diagram. Using free software from one of your advertisers, I came up with with a neat little PC board based on the schematic shown and was about ready to send off an order, then I noticed what seems to be an error.

Mr. Tadlock

Response: LED1 is the infrared LED emitter. LED2, LED3, and LED4 are regular LEDs. The design will alternately flash LED3 and LED4. The LED1-LED4 in the Parts List is a mistake and should not include LED1.

If you wish to have the circuit flash two sets of LEDs (four in total), duplicate the oscillator formed with Q5 and Q6. Connect this in parallel with the existing oscillator between +9 VDC and the drain of Q4.

Thank you for your interest in this project!

— Paul Florian

PARTICULAR ABOUT PICs

Long time subscriber ...

What happened to the "Getting started with PICs" section?

It is missing in the current issue. While PICAXEs are neat, they aren't as powerful or have the range of applications PICs do.

Please bring back the "Getting started with PICs" section.

Also, you appear to be redesigning your magazine ... or it's a slow article month. Reviewing ink systems? Please keep the magazine focused on electronics and electronic projects.

If I wanted general product reviews, I would go to the Internet. Broadening the scope of a targeted magazine like this is a quick way to lose your readers.

Michael Cunningham

Response: In order to diversify the content in each issue, all of our microcontroller columns run alternate months. — Ed.

TECH FORUM

This is a READER-TO-READER Column.

All questions *AND* answers are submitted by *Nuts & Volts* readers and are intended to promote the exchange of ideas and provide assistance for solving problems of a technical nature. Questions are subject to editing and will be published on a space available basis if deemed suitable by the publisher. Answers are submitted by readers and NO GUARANTEES WHATSOEVER are made by the publisher. The implementation of any answer printed in this column may require varying degrees of technical experience and should only be attempted by qualified individuals. Always use common sense and good judgement!

All questions and answers should be sent by email to forum@nutsvolts.com All *diagrams should be computer generated and sent with your submission as an attachment.*

QUESTIONS

To be considered, all questions should relate to one or more of the following:

1. Circuit Design
2. Electronic Theory
3. Problem Solving
4. Other Similar Topics

- Be brief but include all pertinent information. If no one knows what you're asking, you won't get any response (and we probably won't print it either).
- Include your Name, Address, Phone Number, and email. Only your Name, City, and State will be published with the question, but we may need to contact you.
- No questions will be accepted that offer equipment for sale or equipment wanted to buy.
- Selected questions will be printed one time on a space available basis.
- Questions are subject to editing.

ANSWERS

- Include in the subject line of your email, the question number that appears directly below the question you are responding to.
- Payment of $25.00 will be sent if your answer is printed. Be sure to include your mailing address or we cannot send payment.
- Only your Name, City, and State, will be printed, unless you say otherwise. If you want your email address included, indicate to that effect.
- Comments regarding answers printed in this column may be printed in the Reader Feedback section if space allows.

Send your electronics questions to forum@nutsvolts.com

>>> QUESTIONS

Has anyone adapted surplus computer parts for other uses? For example: adapting on old sound card for use as an amplifier. If so, please tell what you did and how. Also, can someone explain the similarities and differences between audio CDs and DVDs?

#6081 **Paul Vandervort**
via email

Okay, I'm a rebel. I don't have nor do I want another two year commitment for cell service (or for that matter a dual data/voice plan). Just pay my bill and use my old(er) cell phone. To the point: Several years ago, I'd seen a device that plugged into a laptop's modem port and then to the headset port of a cell phone, and presto — an Internet connection! All that I can figure out is the interface device must have somehow produced a tone for the modem to believe it had a live line. From there, it was a simple matter of pushing 'speed dial' on the cell phone and away you went – surfing. Do you have any ideas about this and how it could be built from scratch? Better yet, could there be something built that would handshake between the data or USB port?

#6082 **A. Raines**
via email

How can I configure a small LCD display as a voltmeter and/or amp meter?

#6083 **Paul Vandervort**
via email

>>> ANSWERS

[#3084 - March 2008]

I would like to use the sensor from a laser mouse for a rotary encoder in a robotic arm. How can I read from it, using an MCU? My plans are to mount it inside a joint on the arm pointed at the side wall, read the distance, then translate that into rotational degrees.

What you are looking for is called a quadrature encoder, and was used in the older opto-mechanical mice. It consists of a slotted disc and two infrared sensors opposite of an infrared LED, coupled through a friction gear to a ball. Two of these assemblies — 90 degrees mechanically rotated — give X and Y coordinates. The light beams on the disc are arranged in a way that the output is equally spaced and the two signals are usually called Channel A and B. This results in an output of 90 electrical degrees difference at constant speed — hence, the quadrature encoder name. The spacing and size will determine the resolution of the encoder and values of 200-2,000

counts per revolution are common. On some, there is a third channel giving a signal once per revolution, called an index signal. The ones in mice seem to have a resolution of only about 30-50 counts per revolution. However, the friction step-up gearing increases this dramatically. You can use them, just couple them mechanically through a gear or most likely a timing belt to the drive motor or the arm. You can increase the count and the accuracy by stepping up the speed. The electrical interface is simple; only two inputs are needed. There is, however, a catch: You should only count valid transitions. Think about some chatter on only one channel — it is not a valid count. There are integrated circuits such as LSI Computer Systems, Inc., LS7083/7084 IC to prevent invalid counts. You can also prevent them in software. The AN084 from National Instruments, Sharp Electronics Corp., Chapter 7 — "Use of Photointerrupters" and numerous technical notes on Microchip's website can give you further insights (they have a quadrature simulator TB091, a quadrature encoder interface, and AN899, just to mention a few).

Walter Heissenberger
Hancock, NH

[#4081 - April 2008]

Color LCD touch screen displays cost hundreds of dollars while you can get a used Nintendo DS with one touch screen and one static screen for under $50 on eBay or other sources.

How can a Nintendo DS color display and touch screen be used for a PIC or PICAXE project?

#1 High volume consumer products such as cell phones and portable video games have the volume to get very competitive prices and custom function LCD screens. Similar general-purpose LCD screens and OEM replacements are available from other channels.

To salvage and use the LCD screens for other projects has a couple of hurdles. Firstly, without the manufacturer's datasheet the module is worthless. It can't be brought to life without accurate data timing, etc. Secondly, a full color screen requires three times the data flow compared with a monochrome one, typically this is eight bits of R, G, and B data. The data rate for this stream is quite high (20–30 Mbits/s) and well beyond an eight-bit microcontroller's performance. Thirdly, the flex circuit supplied on these requires a fine-pitch connector that is hard to source and a challenge to solder by hand.

Having said that, it is possible to get these or similar LCDs to play by using a helper chip between the microcontroller (AVR, PIC) and the LCD. Typically, these are constructed from a PLD (Programmable Logic Device) or FPGA (Field Programmable Gate Array) such as Xylinx, or a high performance 16-bit microcontroller such as an ARM device.

If you start with a generic OEM cell phone LCD — which costs only $20 from SFE — and has serial data programming, you could use an eight-bit microcontroller to drive it.

Here's some links:

Typical LCD datasheet: **http://tinyurl.com/24xt2q**

SFE Nokia serial input color LCD page: **http://tinyurl.com/evep4**

SFE "Sinister Seven" LCD Project: **http://tinyurl.com/ytlqo8**

Peter Stonard
Campbell, CA

#2 Microchip Technology has a web-based seminar (they call them webinars) about graphic color and monochrome LCDs, their format, and the PIC24F interface. The files tend to be rather large, typically 30-50 MB and can be downloaded to a PC or run directly in streaming media format. Search for GrLCD_p1_10 or go to their training section. This is a good starting point and explains the different graphics controllers and their interfaces in broad terms. Usually, at the end they have pointers to the other resources which are available, such as application notes, sample code, development boards etc.

Walter Heissenberger
Hancock, NH

IN THE SPOTLIGHT

An Interview with Kevin Hess

Director of Marketing & Business Development, Mouser Electronics

by Marvin Mallon

This month's spotlight is on Mouser Electronics, a major distributor of electronic components. Their headquarters are located in Mansfield, TX — a suburb of Dallas/Fort Worth. The 432,000 square foot facility is maintained and operated by 550 employees, making them one of the largest national companies in the industry.

Mouser features over 900,000 products online from more than 335 manufacturers. Their nearly 2,000-page catalog is published every 90 days, providing designers with up-to-date data on the components now available for the next generation of electronic devices. They ship globally to over 280,000 customers in 170 countries from their new state-of-the-art facility.

In addition to its print catalog, Mouser's website makes it easy for design engineers and hobbyists to browse and buy from over 900,000 products online. They provide daily updates and continuous refinement of the website with many user-friendly tools, such as the Project Manager and Bill of Materials features. Customers can view more than 677,000 downloadable datasheets, as well as over 1.5 million cross-referenced parts.

We recently posed some questions to Kevin Hess, the Director of Marketing & Business Development. He responded as follows:

Marvin: When was your company founded and by whom?
Kevin: Jerry Mouser, a Physics instructor who needed components for a newly formed electronics program at his school, founded Mouser Electronics in 1964 in El Cajon, CA. He couldn't find small quantities of the components he wanted to use in teaching his students, so he had to buy larger quantities and store them in his garage. As other educators heard he had components available, they would buy a few pieces from him and Mouser Electronics was born!

In 1983, a branch office was opened in Mansfield, TX, located 20 miles south of the Dallas/Fort Worth Airport. As the electronics industry significantly expanded, the Mansfield branch grew rapidly and by 1986, the company's executives moved the corporate headquarters to the Mansfield location.

M: Who are the principal executives? How long have they been with Mouser?
K: The principal executives of Mouser Electronics are: Glenn Smith, President since 1988 and then appointed CEO in 2004. He has been with the company for over 33 years. Our Vice President of Product Marketing is Barry McConnell. He has worked for Mouser for more than 22 years. I've been here for more than 17 years and am presently the Director of Marketing & Business Development.

M: What are the names of your most popular products? When were they introduced?
K: As a broad line catalog distributor of components across the board, there are too many to possibly zero in on, but we do focus on semiconductors, optoelectronics, passive, and interconnect products. We continuously update both print and online catalogs with new products from over 335 suppliers.
M: Are you a publicly traded company or privately owned?
K: As of March last year, we are a subsidiary of Berkshire Hathaway, the Omaha firm headed up by Warren Buffett.

M: Finally, can you summarize the marketing philosophy of Mouser?
K: Mouser's explosive growth is due in part to its broad-based line card of electronic components from well over 335 premier industry suppliers. Mouser is an authorized distributor of product lines that include semiconductors, optoelectronics, passives, circuit protection, interconnects, wire and cable, electromechanical, sensors, enclosures and thermal management, power sources, test, tools, and specialty products. In addition to the broad product line-up, Mouser keeps strengthening its supplier base to include some of the most well recognized manufacturers in the industry. New suppliers and their respective product lines are continually added, making Mouser the design engineers' one-stop shop for all the board-level components necessary for total product design projects. We are the fastest growing catalog distributor in the industry and the only major catalog distributor to publish a new catalog every 90 days. **NV**

MOUSER ELECTRONICS
1000 North Main St.,
Mansfield, TX 76063
Tel: **800-346-6873**
Email: **sales@mouser.com**
Web: **www.mouser.com**

■ LOOK FOR ■ SEARCH FOR ■ FIND

Find your favorite advertisers here!

AD INDEX

AMATEUR RADIO AND TV

Powerwerx 33
Ramsey Electronics, Inc. 24-25

BATTERIES/ CHARGERS

Cunard Associates 34
Powerwerx 33

BUYING ELECTRONIC SURPLUS

Earth Computer Technologies 34
Jaycar Electronics 31

CCD CAMERAS/ VIDEO

Circuit Specialists, Inc. 114-115
Matco, Inc. 34
PCB Fab Express 73
Ramsey Electronics, Inc. 24-25

CIRCUIT BOARDS

AP Circuits 81
Comfile Technology 15
Cunard Associates 34
Dimension Engineering 73
ExpressPCB 57
FlyPCB 35
LEDkit.biz 34
PCB Fab Express 73
PCB Pool 87
Pulsar, Inc. 34
R4Systems, Inc. 55
Schmart Board 35

COMPONENTS

Cam Expert, LLC 34
Electronic Goldmine 55
Front Panel Express LLC 56
Jameco 63
Lemos International Co., Inc. 9
Linx Technologies 56
Mouser Electronics 11
Pulsar, Inc. 34
SparkFun Electronics 4
Super Bright LEDs 72

COMPUTER

Hardware

ActiveWire, Inc. 35
Earth Computer Technologies 34

Microcontrollers / I/O Boards

Abacom Technologies 9
Comfile Technology 15
EMAC, Inc. 81
FlyPCB 35
Gleason Research 35
HobbyLab 34
Microchip 23
microEngineering Labs 90
Mouser Electronics 11
Net Media 2
Parallax, Inc. .....Back Cover
Pololu Robotics & Electronics 81
R4Systems, Inc. 55
Scott Edwards Electronics, Inc. 73
Solarbotics/HVW 72
Trace Systems, Inc. 41
XGameStation 35

DESIGN/ ENGINEERING/ REPAIR SERVICES

Cam Expert, LLC 34
Electronic Design Mexico 35
ExpressPCB 57
FlyPCB 35
Front Panel Express LLC 56
PCB Pool 87
Pulsar, Inc. 34
R4Systems, Inc. 55
Shooting Star Technology 10
Trace Systems, Inc. 41

DISPLAY

Comfile Technology 15

EDUCATION

Command Productions 33
EMAC, Inc. 81
Gleason Research 35
LEDkit.biz 34
PAiA 55
Schmart Board 35
XGameStation 35

EMBEDDED TOOLS

Mouser Electronics 11
NetBurner 5

ENCLOSURES

Integrated Ideas & Tech. 56

EVENTS

RoboGames 66

KEYBOARD EMULATORS

Hagstrom Electronics 34

KITS & PLANS

DesignNotes.com, Inc. 57
Earth Computer Technologies 34
Electronic Goldmine 55
Electronics 123 34
EMAC, Inc. 81
Information Unlimited 111
Jaycar Electronics 31
LEDkit.biz 34
NetBurner 5
PAiA 55
QKITS 35
Rabbit, A Digi International Brand 3
Ramsey Electronics, Inc. 24-25
Scott Edwards Electronics, Inc. 73
Solarbotics/HVW 72
XGameStation 35

LASERS

Information Unlimited 111

LSI (micon)

Renesas Technology Corp 47

MISC./SURPLUS

All Electronics Corp. 91
Electronic Goldmine 55
Front Panel Express LLC 56

MOTORS

Jameco 63

PLASTIC PARTS

Electronic Design Mexico 35

PROGRAMMERS

Electronic Design Mexico 35
Electronics 123 34
microEngineering Labs 90

PUBLICATIONS

Lakeview Research 35

RF TRANSMITTERS/ RECEIVERS

Abacom Technologies 9
Linx Technologies 56
Matco, Inc. 34

ROBOTICS

Gleason Research 35
HobbyLab 34
Jameco 63
Labjack 35
Lemos International Co., Inc. 9
Lynxmotion, Inc. 101
Net Media 2
Pololu Robotics & Electronics 81
RoboGames 66
Robot Power 73
Shooting Star Technology 10
Solarbotics/HVW 72
SparkFun Electronics 4

SATELLITE

Lemos International Co., Inc. 9

SECURITY

Information Unlimited 111
Linx Technologies 56
Matco, Inc. 34

TEST EQUIPMENT

Circuit Specialists, Inc. 114-115
DesignNotes.com, Inc. 57
Dimension Engineering 73
Electronic Design Specialists 87
HobbyLab 34
Jaycar Electronics 31
Labjack 35
Trace Systems, Inc. 41

TOOLS

NetBurner 5
Shooting Star Technology 10

WIRE, CABLE AND CONNECTORS

DesignNotes.com, Inc. 57
Jameco 63
Powerwerx 33
SparkFun Electronics 4

Abacom Technologies 9
ActiveWire, Inc. 35
All Electronics Corp. 91
AP Circuits 81
Cam Expert, LLC 34
Circuit Specialists, Inc. 114-115
Comfile Technology 15
Command Productions 33
Cunard Associates 34
DesignNotes.com, Inc. 57
Dimension Engineering 73
Earth Computer Technologies 34
Electronic Design Mexico 35
Electronic Design Specialists 87
Electronic Goldmine 55
Electronics 123 34
EMAC, Inc. 81
ExpressPCB 57
FlyPCB 35
Front Panel Express LLC 56
Gleason Research 35
Hagstrom Electronics 34
HobbyLab 34
Information Unlimited 111
Integrated Ideas & Tech. 56
Jameco 63
Jaycar Electronics 31
Labjack 35
Lakeview Research 35
LEDkit.biz 34
Lemos International Co., Inc. 9
Linx Technologies 56
Lynxmotion, Inc. 101
Matco, Inc. 34
Microchip 23
microEngineering Labs 90
Mouser Electronics 11
NetBurner 5
Net Media 2
Parallax, Inc. .....Back Cover
PAiA 55
PCB Fab Express 73
PCB Pool 87
Pololu Robotics & Electronics 81
Powerwerx 33
Pulsar, Inc. 34
QKITS 35
R4Systems, Inc. 55
Rabbit, A Digi International Brand 3
Ramsey Electronics, Inc. 24-25
Renesas Technology Corp 47
RoboGames 66
Robot Power 73
Schmart Board 35
Scott Edwards Electronics, Inc. 73
Shooting Star Technology 10
Solarbotics/HVW 72
SparkFun Electronics 4
Super Bright LEDs 72
Trace Systems, Inc. 41
XGameStation 35

Our Premium All in One Repairing System

- All in One system. Combines the function of a Hot Air Gun, a Soldering Iron and a Desoldering Gun.
- Microprocessor controlled ESD safe unit. All digital display of hot air temperature, soldering iron temperature, desoldering gun temperature and air pressure with touch type panel controls.
- The desoldering tool comes with zero crossing circuitry preventing electrical surges and is equipped with air cylinder type strong suction vacuum pump.
- The 24V soldering iron is compatible with the compound tip design by connecting the ceramic heater, sensor, control unit and tip as one. Designed for efficiency. Replacement of tips with easy slip in/out method.
- Compatible with various type of air nozzles.
- Compatible with different kinds of tips.
- Full compliment of nozzles & tips are available.
- Use with lead-free or standard solder.

FREE CSI486 Smoke Filter (a $27.99 value) with the purchase of a CSI-9000

Item# CSI-9000

Only $249.00

Details at Web Site > Soldering & Rework > Hot Air Rework

www.CircuitSpecialists.com

Circuit Specialists Soldering Station w/Ceramic Element & Seperate Solder Stand

$39.95!

- Ceramic heating element for more accurate temp control
- Temp control knob in F(392° to 896°) & C(200° to 489°)
- 3-prong grounded power cord/static safe tip
- Seperate heavy duty iron stand
- Replaceable iron/easy disconnect
- Extra tips etc. shown at web site

Rapid Heat Up!

Item # CSI-STATION1A

***Also* Available w/Digital Display & MicroProcessor Controller**

$51.95

Item # CSI-STATION2A

Details at Web Site

SMD Hot Tweezer Adaptor Fits **CSI Stations 1A** & **2A**, and **CSI906**

$29.00

Item # CSITWZ-STATION

> Soldering & Rework > Soldering Stations

Variable Temperature Hot Air Gun w/Heat Shrink

- 2000 watt output
- Special handle allows the heat gun to stand upright
- Choice of two speed & temperature settings: Low provides 51° - 580°C (123.8° - 1076°F) and High provides 57° - 650°C (134.6° - 1202°F)
- 5-1/2' Power Cord with secure-lock plug

This excellent quality hot air gun is bundled with a total of 68' of Heat Shrink...FREE!

This is a $15.57 value included at no extra cost!

NEW !

Details at Web Site > Electronic Parts & General Supplies > Hand Tools

Item #: HE-2000TK Now Only $22.95

Dual Output DC Bench Power Supplies

High stability digital read-out bench power supplies featuring constant voltage and current outputs. Short-circuit and current limiting protection is provided. SMT PC boards and a built-in cooling fan help ensure reliable performance and long life.

As Low As $99.50!

- Source Effect: $5x10^{-4}$=2mV
- Load Effect: $5x10^{-4}$=2mV
- Ripple Coefficient:: <250uV
- Stepped Current: 30mA +/- 1mA

HOT ITEM!

*All 3 Models have a **1A/5VDC Fixed Output** on the rear panel*

CSI3003X-5: 0-30v/0-3amp 1-4: **$105.95** 5+: **$99.50**

CSI5003X5: 0-50v/0-3amp 1-4: **$114.95** 5+: **$109.00**

CSI3005X5: 0-30v/0-5amp 1-4: **$119.00** 5+: **$114.00**

Details at Web Site > Power Supplies > Bench Power Supplies

Programmable DC Power Supplies

The CSI 3600 Series Programmable DC Power Supplies are equipped with a back-lit LCD display, number keypad and a rotary code switch for ease of use & quick programming. Voltage, Current & Power can all be displayed on the LCD or computer screen (with optional RS-232 interface module). It can be operated at constant current mode, constant voltage mode & constant power mode. It also can be set with maximum limits for current & power output. Ideal instruments for scientific research, educational labs or any application requiring a sophisticated DC-power source.

Model	CSI3644A	CSI3645A	CSI3646A
DC Voltage	0-18V	0-36V	0-72V
DC Current	5A	3A	1.5A
Power (max)	90W	108W	108W

Only $199.00 Each!

Details at Web Site

> Power Supplies > Bench Power Supplies

In Business

Circuit Specialists Inc.

Since 1971

ESD Safe CPU Controlled SMD Hot Air Rework Station

The heater and air control system are built-in and adjusted by the simple touch of the front keypad for precise settings. Temperature range is from 100°C to 480°C / 212°F to 896°F, and the entire unit will enter a temperature drop state after 15 minutes of non-use for safety and to eliminate excessive wear.

Item# CSI825A++

- CPU Controlled
- Built-in Vacuum System
- Temperature Range:100°C to 480°C / 212°F to 896°F
- 15-Minute Stand-By temperature "sleep" mode
- Power:110/120 VAC, 320 W maximum

Only $159.00!

Details at Web Site

> Soldering & Rework > Hot Air Rework

Triple Output Bench Power Supplies

with Large LCD Displays

- Output: 0-30VDC x 2 @ 3 or 5 Amps & 1ea. fixed output @ 5VDC@3A
- Source Effect: $5x10^{-4}$=2mV
- Load Effect: $5x10^{-4}$=2mV
- Ripple Coefficient: <250uV
- Stepped Current: 30mA +/- 1mA
- Input Voltage: 110VAC

CSI3003X3: 0-30VDCx2 @3A **$188.00** **5+: $183.00**

CSI3005XIII: 0-30VDCx2 @5A **$249.00** **5+: $234.00**

Details at Web Site > Power Supplies > Bench Power Supplies

Circuit Specialists, Inc. 220 S. Country Club Dr., Mesa, AZ 85210
800-528-1417 / 480-464-2485 / FAX: 480-464-5824

SPECIAL PURCHASE !

150 Watt 24V/6.5A Single Output Switchable Power Supply

- High efficiency
- High reliability
- Output reverse protection
- VAC input range selected by switch
- 100% full load burn-in test
- EMI/RFI: FCC Part 15J, Class A & CISPR 22 Class A
- DC adjust range:± 10% of rated output voltage
- Convection cooling
- LED Power on indication
- Protection: Over-voltage/Over-current/Over-power/Short-circuit
- Overshoot and Undershoot: autorecovery
- Input range: 90-132VAC/ 180-264VAC
- Approval of UL, cUL, CCC, CE & TUV

Item # CSI-15024-1M

Only $19.00 Each / 10+ $14.95 / 100+ 12.95

Details at Web Site

> Power Supplies > Enclosed Switching Power Supplies

Stepper Motors

Part #:	Motor Frame Size:	Holding Torque:	Price:
42BYGH404	NEMA 17	3.4kg.cm/47oz.in	$17.95
57BYGH207	NEMA 23	8kg.cm/111oz.in	$24.95
57BYGH303	NEMA 23	15kg.cm/208oz.in	$29.95
57BYGH405	NEMA 23	20kg.cm/277oz.in	$34.95
85BYGH350B-03	NEMA 34	48kg.in/665oz.in	$79.95
85BYGH350C-03	NEMA 34	63kg.cm/874oz.in	$119.95

Stepper Motor Controllers: 2 Phase Microstepping Stepper Motor Driver (Bi-polar & Unipolar Motors)

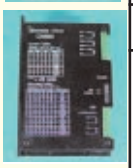

Part #:	Dimensions:	MicroStep:	Price:
XCW220	100mm x 61mm x 19mm	1(200), 1/2(400), 1/4(800), 1/8(1600)	$39.95
CW220	99mm x 65mm x 30mm	1/2(400), 1/8(1600)	$49.95
CW230	115mm x 72mm x 32mm	1(200), 1/2(400), 1/4(800), 1/8(1600), 1/16(3200), 1/32(6400), 1/64(12800)	$59.95
CW250	140mm x 94mm x 45mm	1(200), 1/2(400), 1/8(1600)	$69.95
CW860	147mm x 97mm x 30mm	1(200), 1/2(400), 1/4(800), 1/8(1600), 1/16(3200), 1/32(6400), 1/64(12800), 128(25600), 1/5(1000), 1/10(2000), 1/25(5000), 1/50(10000), 1/125(25000), 1/250(50000)	$119.95

BNC Adapters & Banana to Banana Test Leads

- Standard .750" center-to-center banana plug spacing. .161" holes in body for side stacking
- Nickel plated brass with ABS housing

Part:	Description
A-1057	BNC Male to Dual Banana Plugs
A-1059	BNC Female to Dual Banana Plugs
A-1058	BNC Female to Dual Binding Posts
A-1060	BNC Male to Dual Binding Posts

Only $3.99 Each
10+ $2.99 / 100+ $2.49

- 4mm banana plugs are stackable and machined from brass with a moveable (cont. 360° rotation) contact cage for a tight fit
- Connectors are nickel plated
- Rated current is 15A

Part:	Banana to Banana Test Lead
A-1087BLACK-50CM	Black 50 cm (approx. 20")
A-1087RED-50CM	Red 50 cm (approx. 20")
A-1087BLACK-100CM	Black 100 cm (approx. 40")
A-1087RED-100CM	Red 100 cm (approx. 40")

Size	Each	10+	100+
50CM	$1.49	$1.29	$0.99
100CM	$1.69	$1.49	$1.19

100,000 Count Programmable Data Logging DMM

A power house DMM with 100,000 count accuracy and a built-in data logger that will help you find intermittant problems and monitor equipment while you are busy working on other jobs. The D620 can record and store in it's own internal memory up to 37,300 time stamped data values in all functions by simply pressing a button. Finally, a DMM that provides the user with features and performance at a fraction of the cost of a similar FLUKE DMM.

- 0.05% of basic accuracy, 100,000 count of high resolution
- Data Logger Memory: 37,300 Points
- RS-232C interface
- True RMS measurements for AC
- Auto Calibration

Only $169.00

Item# PROTEK D620

Details at Web Site

> Test Equipment > Digital Multimeters

mCU Controlled True RMS High Accuracy DMM

HOT Item!

The CSI2205D Micro Control Unit auto-ranging DMM is **UL Approved** and designed for measuring resistance, capacitance, DC & True RMS AC voltage, DC & True RMS AC current, frequency, duty cycle and temperature, along with the ability to test diodes, transistors and continuity. A special feature included is the Auto Test Lead Input Indication Technology. This will ensure that whenever you switch functions on the DMM, the proper positive port LED will light indicating where to plug the red test lead into so that no mistakes can be made by the user. It even goes so far as to give a warning tone if you do plug the lead into the incorrect jack! A very helpful feature for the novice and even for the experienced user who is using the meter in less then ideal lighting conditions. Overall, we find this to be a meter that compares very favorably with much higher priced competitors on the market today!

Details at Web Site

> Test Equipment > Digital Multimeters

Item # CSI2205D

Only $59.00

3-1/2 Digit LCD Panel Meter (enhanced version)

The PM-128E is an enhanced version of our best selling PM-128A. The E version can be set to work with either a 5VDC or 9VDC power source, will perform with either a common ground or an isoalted ground, and is supplied with easy to use jumper points so the end user can easily set the measurement range required.

Details at Web Site

> Panel Meters > Digital LCD Display

$12.25 Quantity Price Breaks at website!

Item# PM-128E

Sensors Are Now in Your Neighborhood!

The most popular Parallax sensors are now available at most RadioShack locations — look for them under the RadioShack brand in the "Sensor" drawer. With the reorganization of their components drawers, RadioShack has added Parallax's five most popular sensor modules to their in-store line. Now your favorite source for sensors can conveniently be found just a short drive away. Check out all the components in the drawers at your local RadioShack today.

RadioShack®
Do Stuff℠

You'll find these sensors in the drawers at your local RadioShack store!

Memsic 2125 Dual-Axis Accelerometer (#276-0029; $32.99) This thermal accelerometer measures tilt, rotation, vibration, and acceleration with a range of +/- 3g. 3.3 to 5 V, 5 mA.

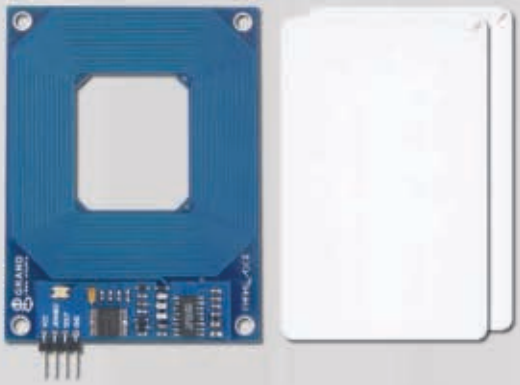

RFID Reader and Tag Sampler Set (276-0032; $49.99) Parallax's Radio Frequency Identification Reader (RFID) Module reads the unique ID of passive RFID transponder tags (two are included). 5 V, 90 mA.

PING)))™ Ultrasonic Sensor (#276-0031; $32.99) Use sound to measure distances from 2 centimeters to 3 meters on just one I/O pin. Great for robotics applications. 5 V, 25 mA.

TSL230 Light-To-Frequency Converter (276-0034; $7.99) Precisely measure light with the TSL230R's diode array, with programmable options to adjust sensitivity and output scale. 3.3 to 5 V, 3 mA.

PIR Sensor (#276-0033; $9.99) The PIR sensor detects motion up to 20 feet away by sensing changing patterns of passive infrared in its vicinity. 3.3 to 5 V, 100 µA.

Locate the **RadioShack** store nearest to you, visit ***www.RadioShack.com/StoreLocator*** or call toll-free **1-800-843-7422**.

PING))), Parallax and the Parallax logo are trademarks of Parallax Inc.

PARALLAX INC.
www.parallax.com